DVB-Terrestrial Receiver

SMP123HDT2+SMP124HDT2

Service Manual

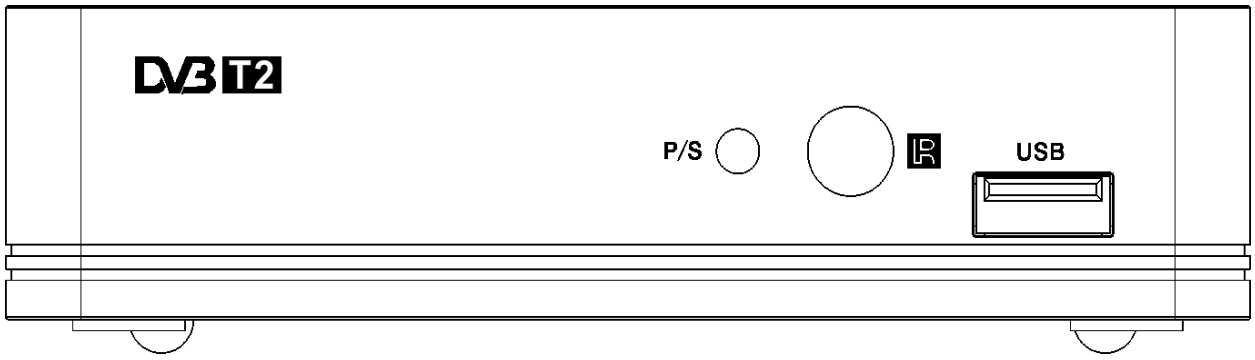

This service manual should be used with the User Manual together.
Please read this Service Manual and User Manual carefully before service this product.

Contents

Safety Instructions

Generally Guide

1. Please check electric circuits before maintenance and change the damaged or over heated components if short-circuit has been found.
2. Please check all protective devices have been installed well after maintenance, such as insulation covering and paper.
3. Please finish following electrical leakage tests after maintenance to avoid electric shock.

Low Voltage Leakage Testing

Take out power cord from an AC outlet and connect a length of wire between the two leads of the plug.

Use Gear R x 10K of the voltmeter to measure the resistance between shorted-out AC plug and exposed metallic parts like screw cap, control shaft etc. which shall be infinite.

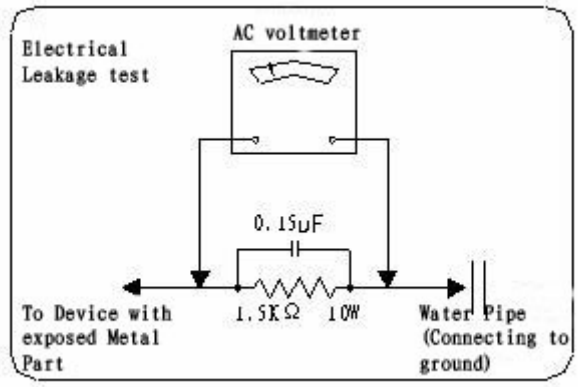

Picture 1

High Voltage Leakage Testing

As shown in Picture 1, connect a resistor of 1.5K, 10W and capacitor of 0.15 uF between exposed metallic part and well grounded devices (water pipe etc.).

Plug power cord directly into the socket. Do not use insulated transformer to test.

Use 1000 Ohm/V or more sensitive voltmeter to measure AC voltage of the resistor.

Turn over the AC jack and plug into the socket again to iterate the inspection as above.

Inspect the voltage of the resistor between other exposed metallic parts and the earth in the same way.

Any parts' voltage of the resistor should not over 0.75Vrms. A leakage testing machine with voltage over 2,500 V can also be used for this inspection in which case the electric leakage should not be over 0.5mA. When the leakage exceeds that limit, electric shock may occur. Please check and repair again before hand it over to users.

4. Protect Electrostatic-Sensitive Devices from Electrostatic Discharge

Some solid states made of semiconductors materials can be easily damaged by commonly static charges, those components are usually called electrostatic-sensitive devices. Such like integrated circuits, laser diodes and field effect devices. The following tips will help you to reduce the impacts on those components while electrostatic discharging.

Please release static which build-up on human body before handling electrostatic-sensitive devices by using grounded tools. The antistatic strap which can be found in the market will be a good choice.

Please install the electrostatic-sensitive devices on conductor products such as aluminum foil to prevent static build-up after disassembling from this DVB-T receiver.

The soldering iron must be earthed while soldering and unsoldering the electrostatic-sensitive devices.

Only antistatic solder can be used for electrostatic-sensitive devices disassembly. The electrostatic-sensitive devices will be damaged by static without ESD prevention solder while disassembling.

Do not use Freon Volatile which may damage the electrostatic-sensitive devices by discharging static.

Do not take the new electrostatic-sensitive devices from the antistatic protection package unless you are ready for installation. (Most electrostatic-sensitive devices will be packed with anti-static foam, foil or similar conductive materials. And a lead wire to prevent short circuit.)

Please contact the core or circuit parts of the device to be installed with ESD protection package before carry out the new electrostatic-sensitive devices from it. And make sure no power supply on the device and remember other precautions.

Try to reduce body movements while assembling or disassembling electrostatic-sensitive devices. (Clothes made of fabrics will build-up static by attrition. Feet lifts up from floor will also build-up static.)

Electrical Specifications

A Audio Section （MPEG-1 Layer Ⅱ, R. L Track Output）				
No.	ITEM	UNIT	REQUIREMENTS	Test Environment
1	Audio Output Level	V	1.0～2.0	Output impedance is 10KΩ 1KHz 0dB
2	Frequency Characteristics	dB	+1/-2.0	20Hz-60Hz
			±0.5	60Hz-17.5KHz
			+1/-3	17.5KHz-20KHz
3	S/N	dB	⩾70	1KHz 0dB weighting
4	L/R Channel Separation	dB	⩾60	N-CBAR100.TS f= 1KHz P-CBAR75.TS
5	L/R Channel Level Difference	dB	⩽0.5	60Hz-18KHz
6	Audio THD	%	⩽1	60Hz-18KHz
7	Digital Coaxial Output Level	Vp-p	0.5±20%	75Ω Load

B Video (MPEG-2MP@ML)					
1	Output range	Video	Vp-p	1.0±15%	75Ω Load
		Brightness/RGB		0.7±10%	
		Sync		0.30±8%	
2	Frequency Characteristics (75Ω)		dB	±0.5	0.5-4.8MHz
			dB	⩽+0.5/-1.0	4.8-5.0MHz
			dB	⩽+0.5/-4	5.0-5.5MHz
3	Brightness S/N		dB	≥56	WTD 5MHz
4	Chromatic S/N		dB	AM≥58	Load 75Ω
				PM≥51	
5	Differential gain（DG）		%	⩽±5	Load 75Ω
6	Differential phase（DP）		°	⩽±5	Load 75Ω
7	Brightness non-linear distortion		%	⩽5	Load 75Ω
8	△τ chrominance-luminance delay inequality		ns	⩽±30	Load 75Ω
9	△K Chrominance-luminance Gain Inequality		%	⩽±5	Load 75Ω
10	Brightness Waveform Distortion		%	⩽3	Load 75Ω
11	Chrominance Subcarrier Offset is not more than		Hz	200	Load 75Ω

C Demodulation			
1	Input Frequency Range	MHz	174~230MHz,470～862MHz (VHF/UHF)
2	Input Level Range	dBm	-75～-20
3	Frequency Offset	MHz	-0.4MHz~+0.74MHz

D Power Supply (~165-264V)				
1	+5V	mA	2000	5%
2	+12V	Ma	120	10%
3	+5V Active Antenna Amplifier	mA	30	5V overload protection

E Others				
1	Free Fall	Meets QJ/ET08.02-2005 Standards		
2	Remote Control Distance	M	⩾8	In line
			⩾6	With range of ±30°
3	Rated Power Consumption	W	10	

Mechanical Exploded View Drawing

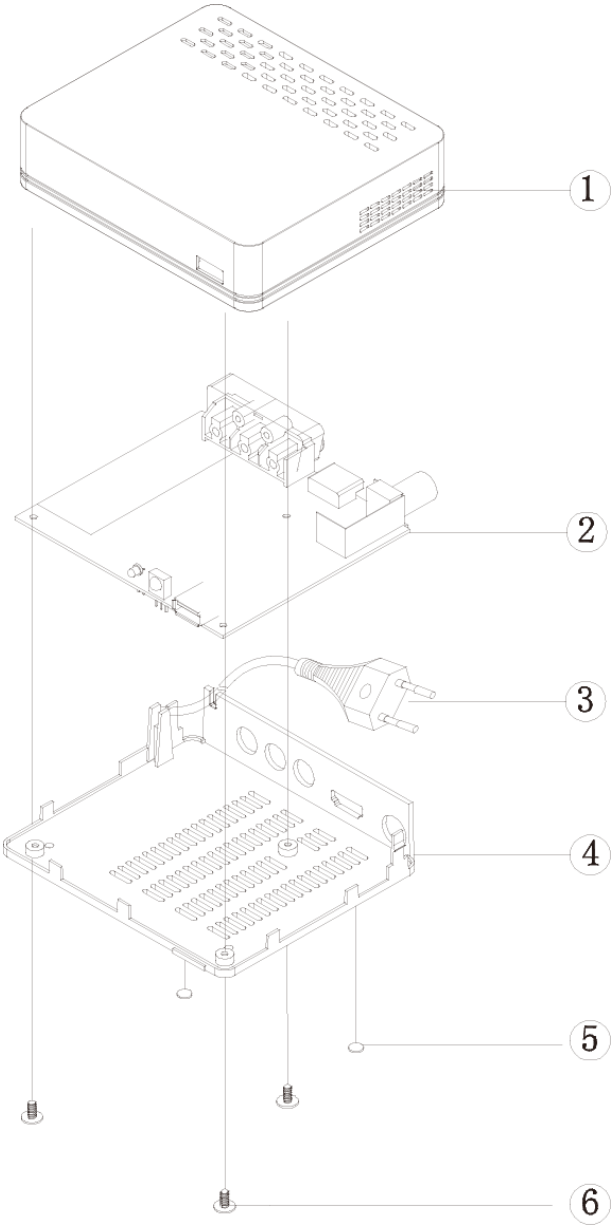

Mechanical Parts List

NO.	Part No.	Part Name	Qty	Notes
1	4110-1704-006H	Front Panel	1	Transparent ABS
2	2104-1770-Y00H	Decoding Board	1	
3	C141-5142-0318	Power Cord	1	1250mm, VDE(2 pins)
4	4111-1704-009H	Bottom Cover	1	ABS
5	3000-4000-0800	Feet Pad	2	Rubber, Black
6	3211-2008-0005	Screws	3	ST2*8PANi

Packaging and Accessories

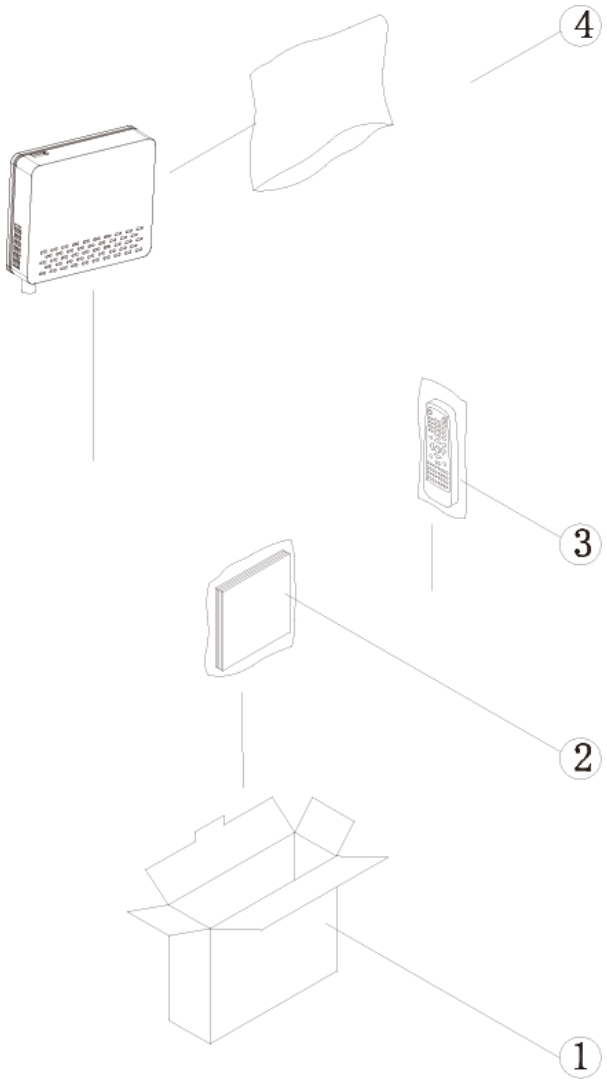

Packaging Exploded View Drawing

Material List

NO.	Material No.	Name	Qty
1	4401-1704-000H	White Box	1
2	ST2.025.0605S	User Manual	1
3	2301-1555-000H	Remote Control	1
4	4413-1812-1100	Bubble Bag 180*210mm	1

Appendix 1 Flowchart and Circuit Diagram

Flowchart

Wiring Diagram

Circuit Diagram of Decoding Board

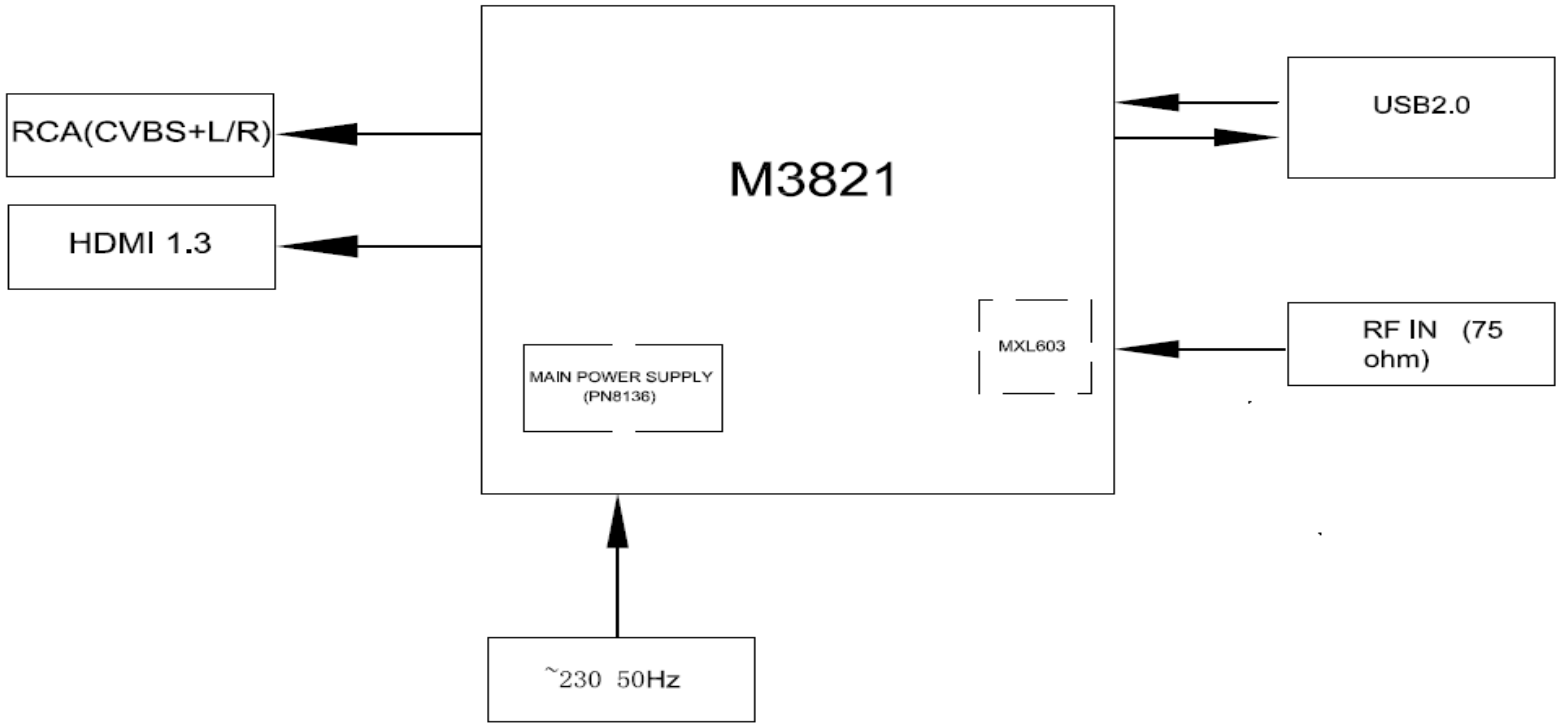
RCA(CVBS+L/R)
HDMI 1.3
M3821
MAIN POWER SUPPLY
(PN8136)
MXL603
USB2.0
RF IN (75
ohm)
~230 50Hz

Flowchart

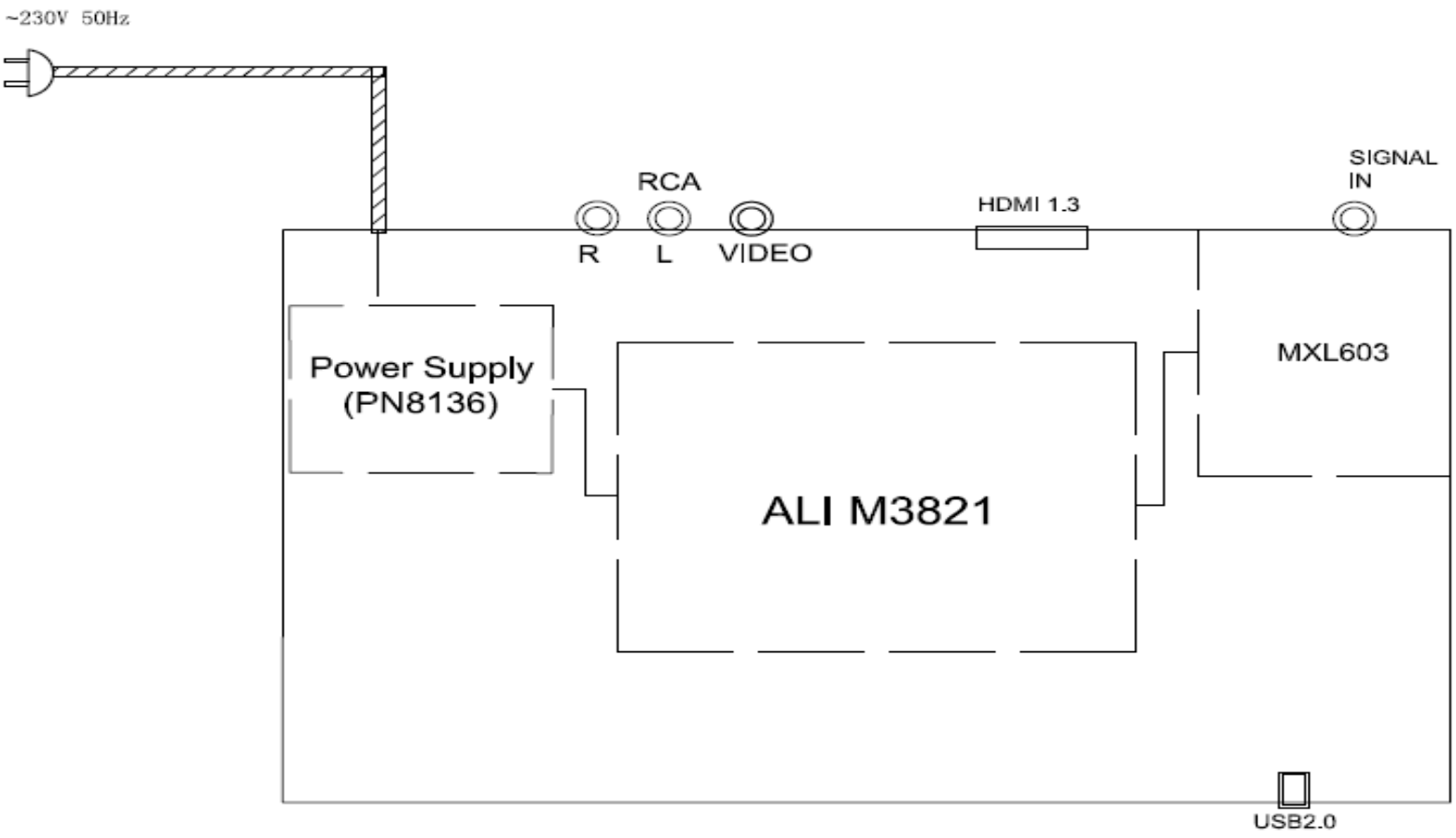

Wiring Diagram

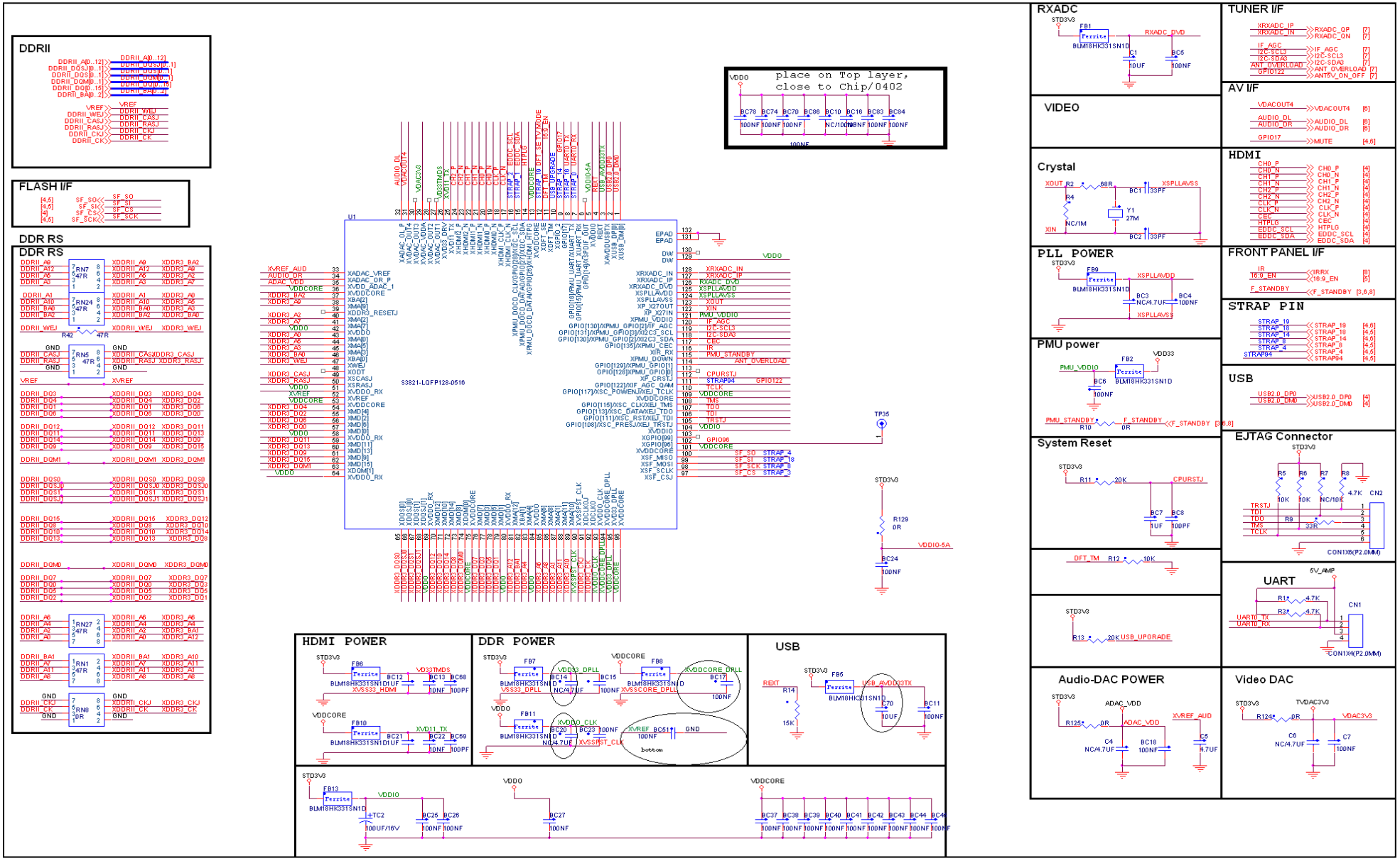

Decoding Board Schematic Diagram (1)

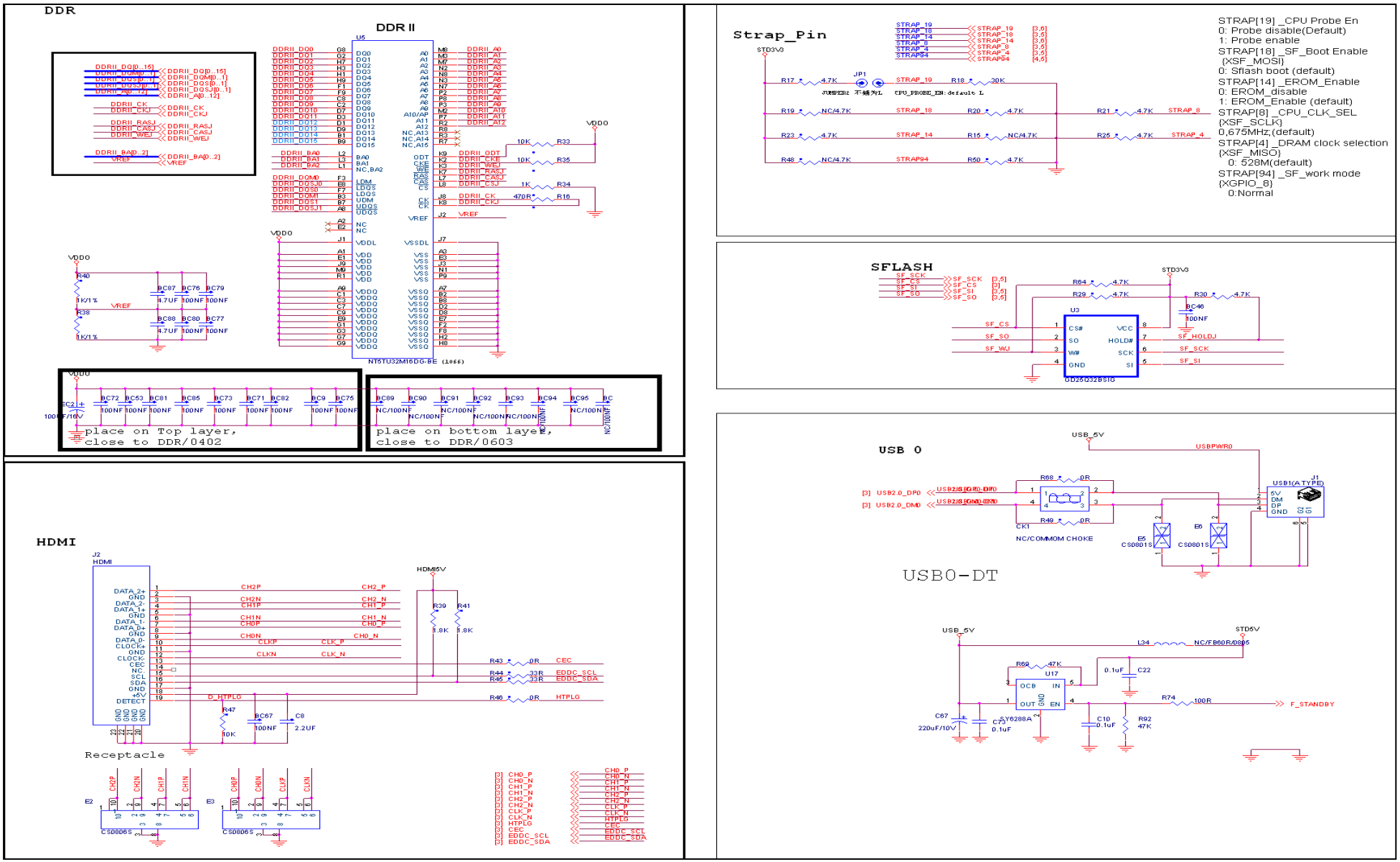

Decoding Board Schematic Diagram (2)

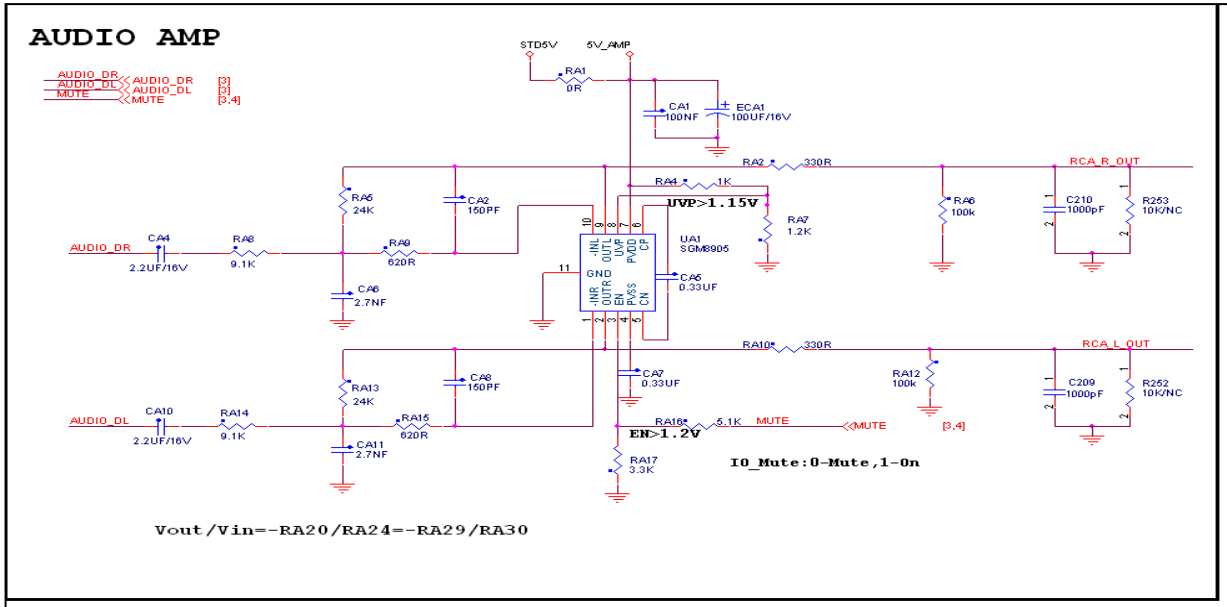

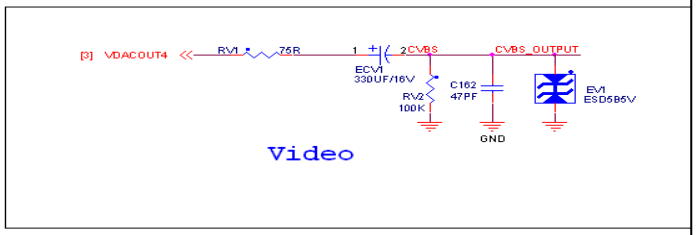

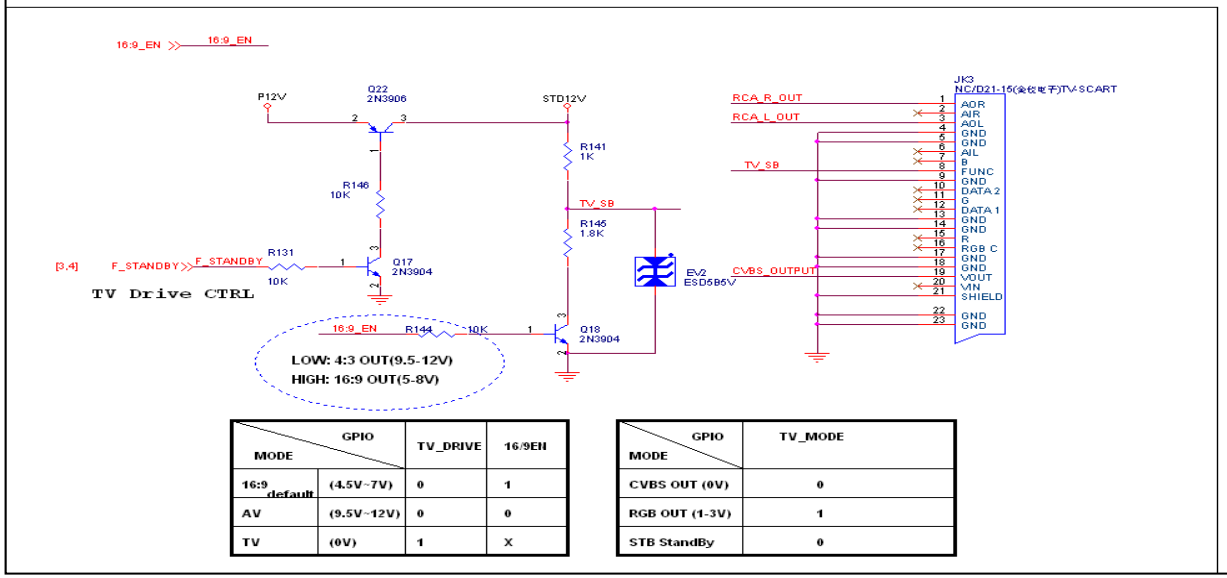

MODE \ GPIO		TV_DRIVE	16/9EN
16:9 default	(4.5V~7V)	0	1
AV	(9.5V~12V)	0	0
TV	(0V)	1	X

MODE \ GPIO	TV_MODE
CVBS OUT (0V)	0
RGB OUT (1-3V)	1
STB StandBy	0

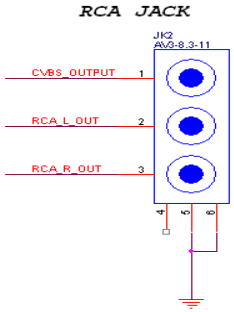

Decoding Board Schematic Diagram (3)

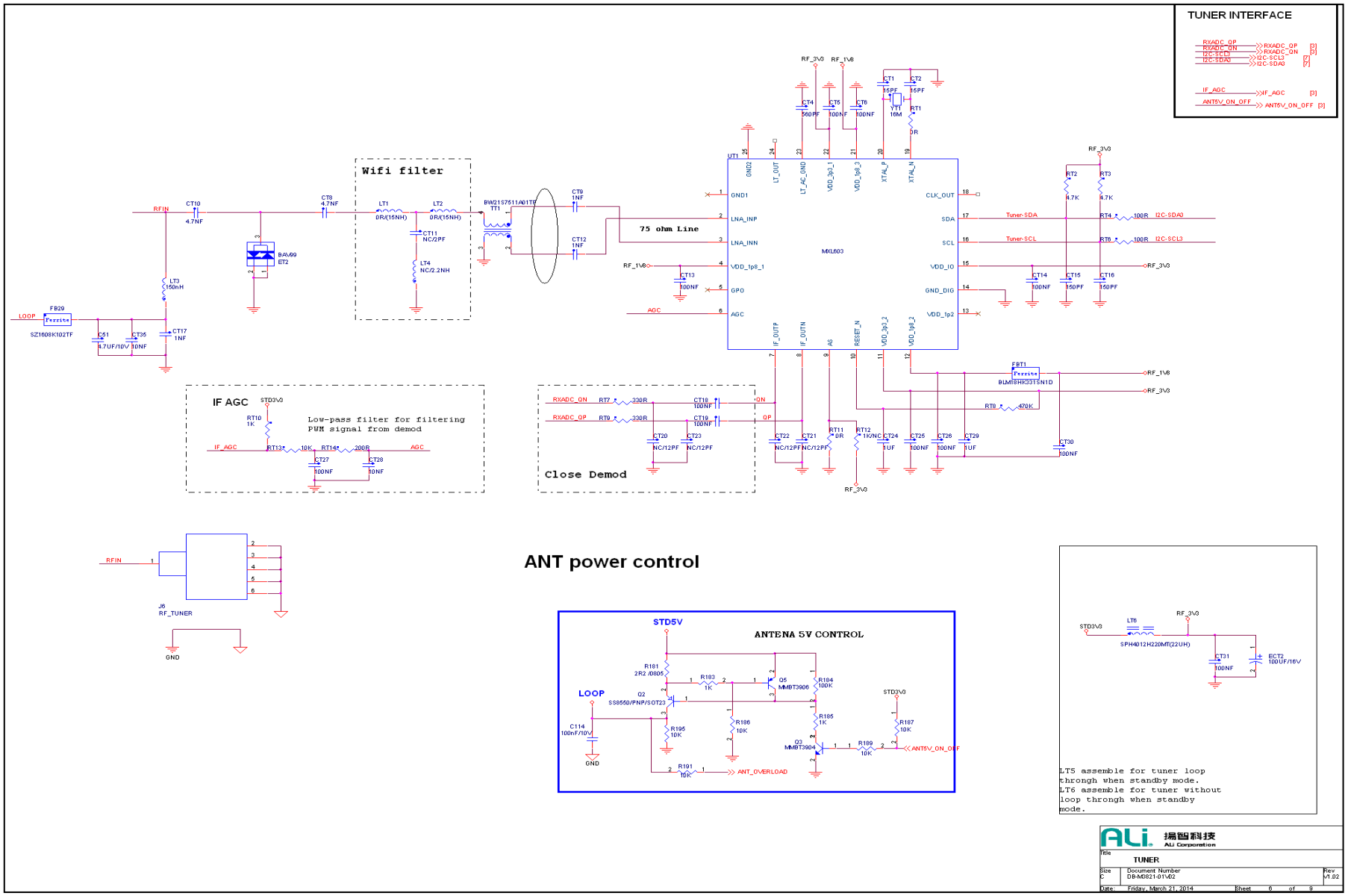
TUNER INTERFACE
Wifi filter
75 ohm Line
MXL603
IF AGC
Low-pass filter for filtering
PWM signal from demod
Close Demod
ANT power control
ANTENA 5V CONTROL
LT5 assemble for tuner loop
throngh when standby mode.
LT6 assemble for tuner without
loop throngh when standby
mode.
TUNER
Decoding Board Schematic Diagram (4)

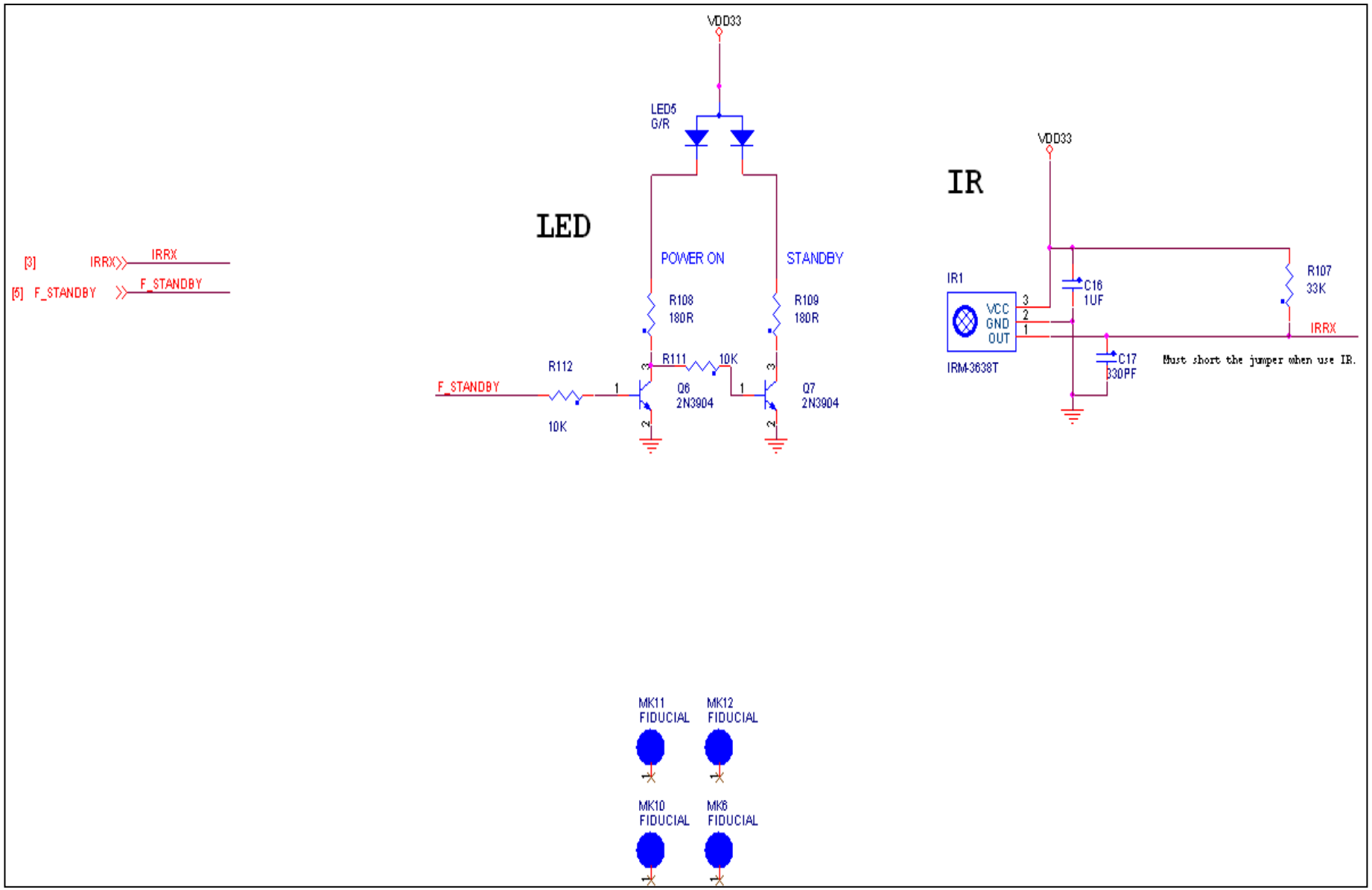

Decoding Board Schematic Diagram (5)

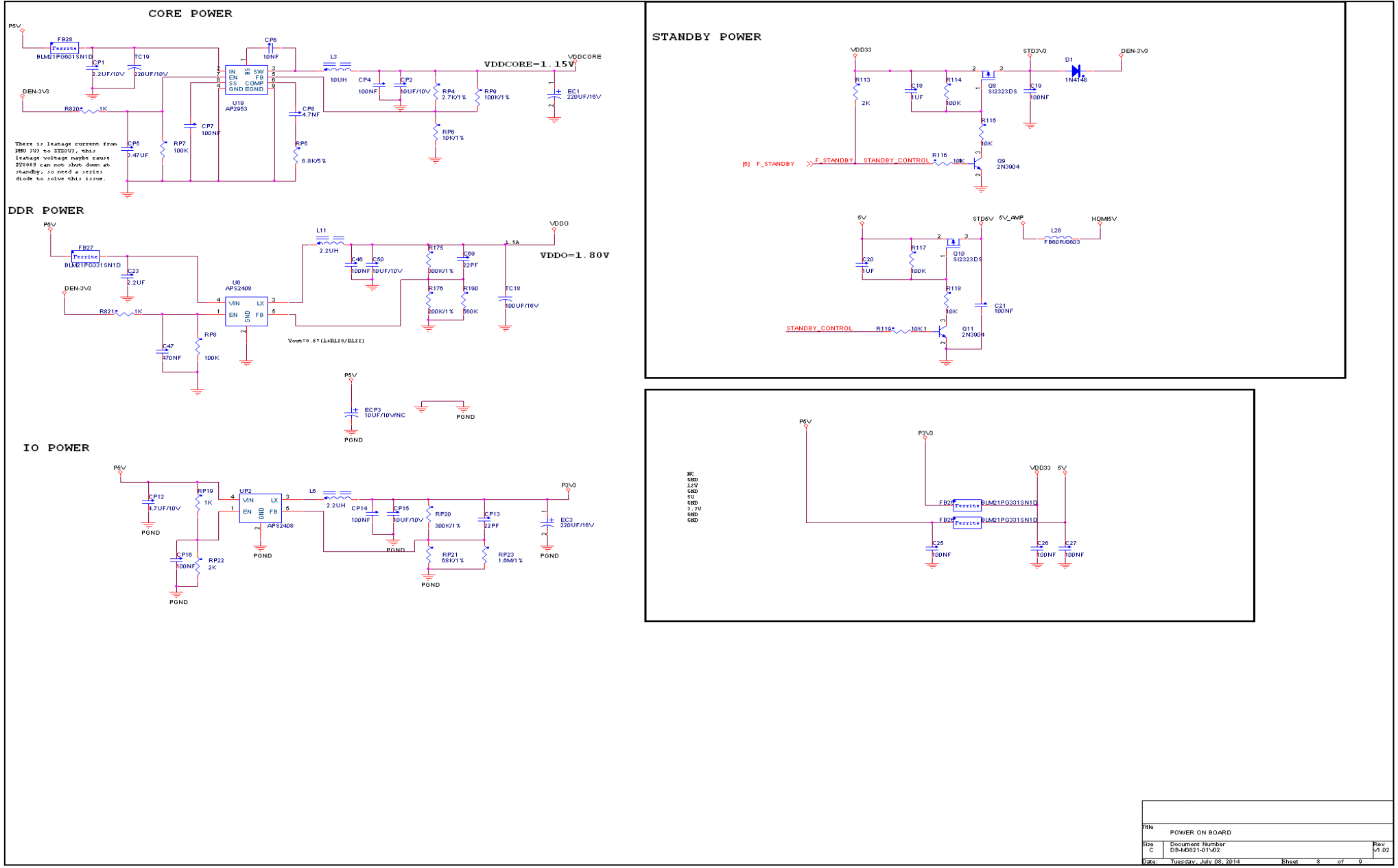

Decoding Board Schematic Diagram (6)

Appendix 2 Silkscreen of PCB

Silkscreen of Decoding Board Top

Silkscreen of Decoding Board Bottom

PCB Diagram of Decoding Board Top

PCB Diagram of Control Board Bottom

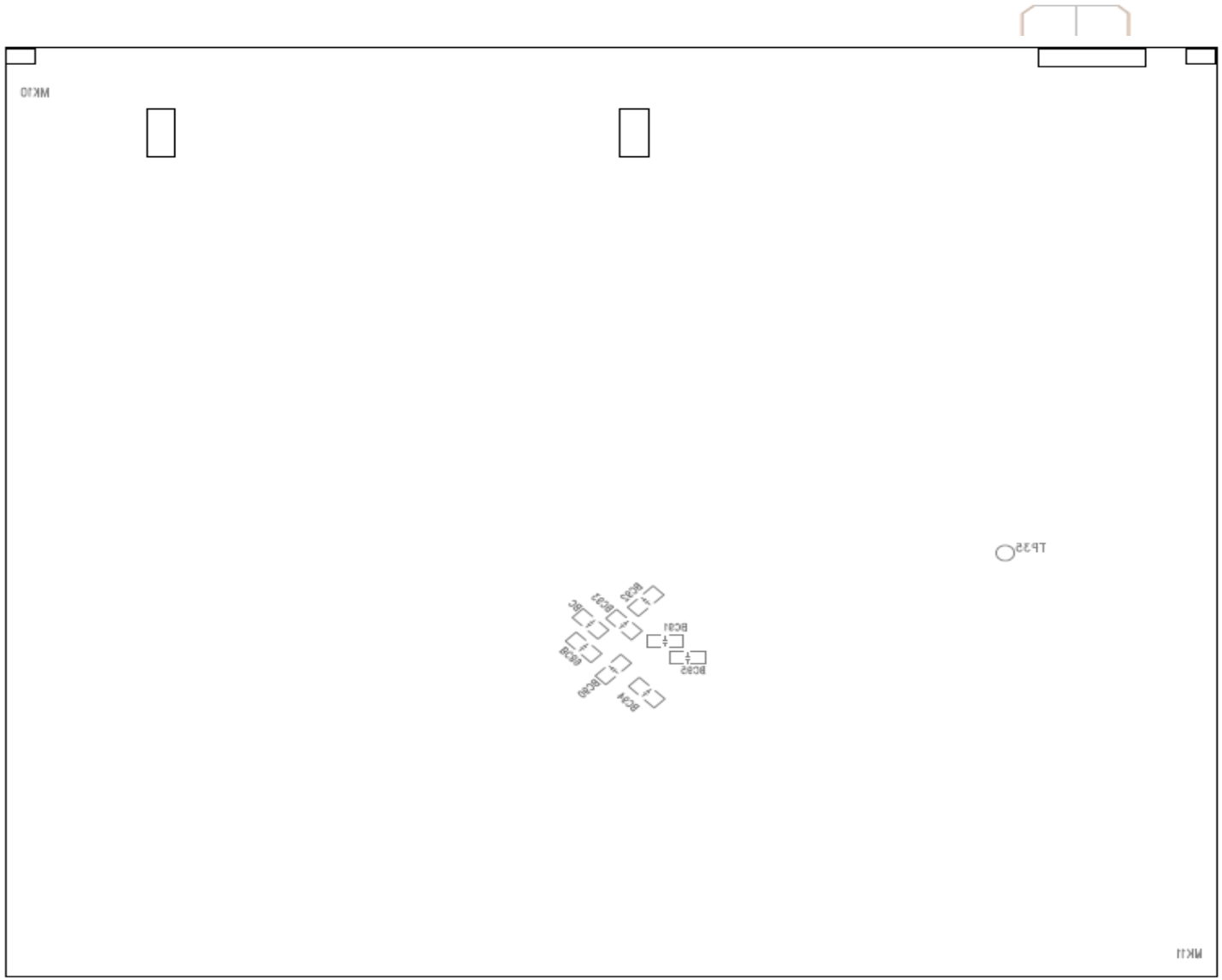

Silkscreen of Decoding Board Bottom

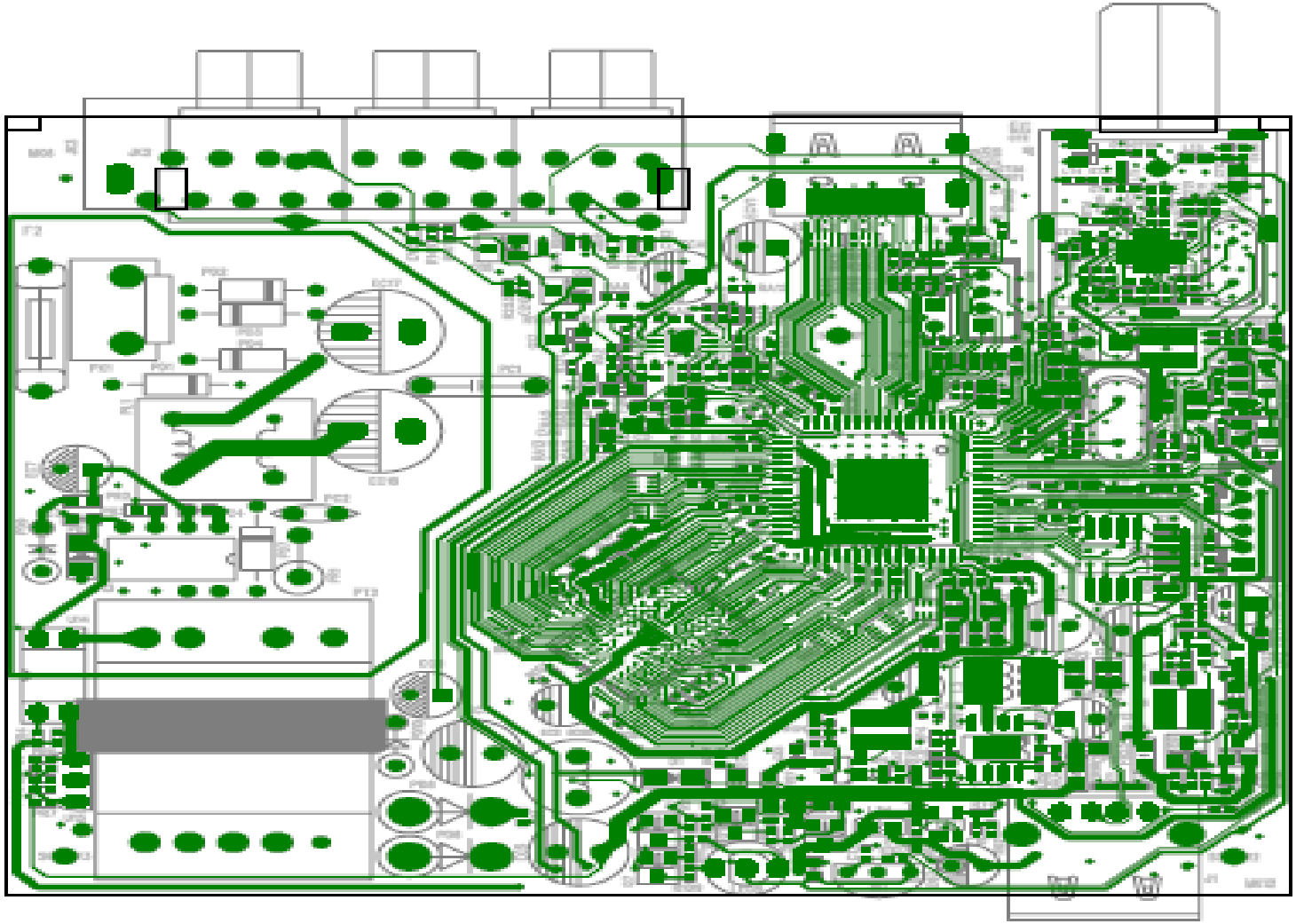

PCB Diagram of Decoding Board Top

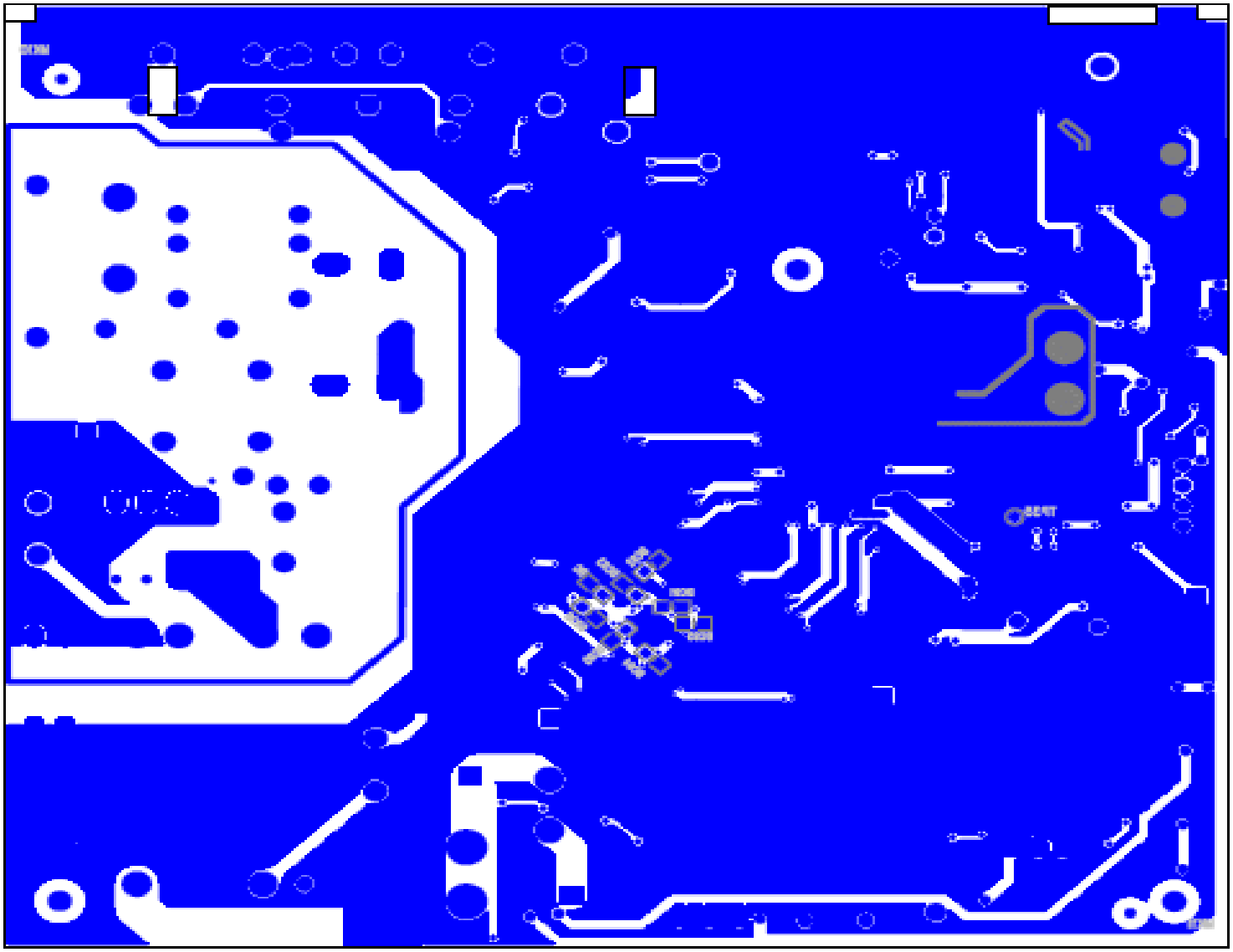

PCB Diagram of Decoding Board Bottom

Appendix 3 Component List

Component List of Decoding Board

Component List

Component List of Decoding Board (1)					
NO	**Material No.**	**Name**	**Specification**	**Position**	**Qty**
1	4208-1770-001H	PCB	ST7.820.1417,102×93×		1
2			1.2mm,FR-4 Double-sided board, ROHS		
3	3260-1000-2004	Heat Sink	ST7.061.0097 Aluminum, ROHS	On the top of U1	1
4			20×20×16mm ROHS		
5	4303-1599-000H	Shield Cover	ST6.430.0024,0.3mm Tinplate,ROHS	J6	1
6			**Bought-in Components**		
7	3020-1000-0004	SMD Resistor	0Ω±5%,1/16w,0402,RoHS	RT1, R10,RT11, R43,R46, R49,	10
8				R68,R124,R125,R129	
9	3020-1330-0007	SMD Resistor	33Ω±5%,1/16w,0402	R9,R44,R45	3
10	3020-1470-0002	SMD Resistor	47Ω±5% 1/16W 0402	R42	1
11	3020-1750-0007	SMD Resistor	75Ω±5%,1/16w,0402	RV1	1
12	3020-1680-0004	SMD Resistor	68Ω±5%,1/16w,0402	R2	1
13	3020-1101-0011	SMD Resistor	100Ω±5%,1/16w,0402	RT4,RT6,	2
14	3020-1181-0003	SMD Resistor	180Ω±5%,1/16w,0402,RoHS	R108,R109	2
15	3020-1201-0003	SMD Resistor	200Ω±5%,1/16w,0402,RoHS	RT14	1
16	3020-1331-0007	SMD Resistor	330Ω±5%,1/16W,0402,ROHS	PR4,RA2,RT7,RT9,RA10	5
17	3020-1471-0003	SMD Resistor	470Ω±5%,1/16w,0402	R16,	1
18	3020-1621-0001	SMD Resistor	620Ω±5%,1/16w,0402,RoHS	RA9,RA15	2
19	3020-6100-0200	SMD Resistor	1K±1%,1/16W,0402	R38,R40,	2
20	3020-1102-0005	SMD Resistor	1K±5%,1/16W,0402	RA4,RT10,PR10,RP19	9
21				R34,R183,R185,R820,R821	
22	3020-1122-0003	SMD Resistor	1.2K±5%,1/16w,0402	RA7	1
23	3020-1182-0003	SMD Resistor	1.8KΩ±5%,1/16w,0402,RoHS	R39,R41,	2
24	3020-1202-0005	SMD Resistor	2K±5%,1/16w,0402	RP22,R113	2
25	3020-2272-0000	SMD Resistor	2.7KΩ±1%,1/16w,0402,RoHS	RP4	1
26	3020-1332-0003	SMD Resistor	3.3K±5%,1/16w,0402	RA17	1
27	3020-1472-0003	SMD Resistor	4.7K±5%,1/16w,0402	R1,RT2,RT3,R3,R17,R20,R21,	13
28				R23,R25,R29,R30,R50 R64	
29	3020-1512-0003	SMD Resistor	5.1KΩ±1%,1/16W,0402,ROHS	RA16,	1
30	3020-6680-0200	SMD Resistor	6.8KΩ±1%,1/16W,0402,ROHS	RP5	1
31	3020-1912-0002	SMD Resistor	9.1KΩ±5%,1/16w,0402,RoHS	RA8,RA14	2
32	3020-1103-0005	SMD Resistor	10K±5%,1/16w,0402	R5,R6,PR6,PR7,PR8,R12, RT13	21
33				R33,R35,R47 ,R111,R112 ,R115	
34				R116,R118, R119,R186	
35				R189,R191,R195, RP6	
36	3020-1153-0003	SMD Resistor	15KΩ±5%,1/16W,0402,ROHS	R14	1
37	3020-1203-0003	SMD Resistor	20KΩ±5%,1/16w,0402	R11,R13	2
38	3020-1243-0001	SMD Resistor	24KΩ±5%,1/16w,0402	RA5,RA13	2
39	3020-1303-0003	SMD Resistor	30KΩ±5%,1/16w,0402,RoHS	R18	1
40	3020-6330-0300	SMD Resistor	33KΩ±1% 1/16W 0402	R107	1
41	3020-1683-0003	SMD Resistor	68KΩ±5%,1/16w,0402,RoHS	RP21	1

Component List

Component List of Decoding Board (2)					
NO.	**Material No.**	**Name**	**Specification**	**Position**	**Qty**
42	3020-1104-0006	SMD Resistor	100K±5%,1/16w,0402	RV2,RA6,RP7,RP8,RA12,R114	9
43				R117,R184,RP9	
44	3020-6200-0400	SMD Resistor	200K±1%,1/16w,0402	PR9,R176	2
45	3020-6300-0400	SMD Resistor	300KΩ±1%,1/16W,0402,ROHS	RP20,R175	2
46	3020-6470-0402	SMD Resistor	470KΩ±1%,1/16w,0402,RoHS	RT8	1
47	3020-1564-0001	SMD Resistor	560KΩ±5%,1/16W,0402,ROHS	R190	1
48	3020-1165-0000	SMD Resistor	1.6MΩ±5%,1/16W,0402,ROHS	RP23	1
49	3020-1000-0001	SMD Resistor	0Ω±5%1/10W,0603,RoHS	RA1,EV2	2
50	3020-1220-0001	SMD Resistor	22Ω±5%,1/10w,0603	PR2	1
51	3020-1331-0000	SMD Resistor	330Ω±5%,1/10w,0603	PR3	1
52	3020-1022-0002	SMD Resistor	2.2Ω±5%,1/8w,0805,ROHS	R181	1
53	3020-3000-0003	SMD Resistors	4×0Ω±5%,0402,ROHS	RN8	1
54	3020-3470-0002	SMD Resistors	4×47Ω±5%,0402,1/16W,ROHS	RN1,RN5,RN7,RN24,RN27	5
55	3020-1104-0005	Carbon Film Resistor	100KΩ±5%,2W,RoHS	PR1	1
56	3040-1020-0000	MLCC	2PF±5%,50V,0402,RoHS	CT11	1
57	3040-1150-0001	MLCC	15PF±5%,50V,0402,RoHS	CT1,CT2	2
58	3040-1220-0005	MLCC	22PF±5%,16V,0402	CP13,C69	2
59	3040-1330-0003	MLCC	33PF±5%,16V,0402	BC1,BC2	2
60	3040-1470-0001	MLCC	47PF±5%,50V,0402,RoHS	C162	1
61	3040-1101-0002	MLCC	100PF±5%,50V,0402,RoHS	BC8,BC68,BC69	3
62	3040-1151-0001	MLCC	150PF±5%,50V,0402,RoHS	CA2,CA8,CT15,CT16	4
63	3040-1331-0006	MLCC	330PF±5%,50V,0402	C17	1
64	3040-1561-0006	MLCC	560pF±10%,50V,0402	CT4	1
65	3040-1102-0002	MLCC	1nF±10%,50V,0402	CT9,CT12,CT17,C209,C210	5
66	3040-1272-0001	MLCC	2700PF±10%,50V,0402,RoHS	CA6,CA11	2
67	3040-1472-0003	MLCC	4.7nF±10%,50V,0402	CT8,CP8,CT10	3
68	3040-1273-0000	MLCC	0.027uF±10%,16V,0603,	PC3	1
69	3040-1104-0018	MLCC	0.1uF+80/-20% 25V 0402	CA1,CP4,BC4,CT5,BC5,CT6	74
70				BC6,CP7,C7,BC9,BC10,BC11	
71				CT13,CT14,CP14,BC15,CP16	
72				BC16,BC17,CT18,BC18,CT19	
73				C19,C21,BC23,BC24,CT25,BC86	
74				C25,BC25,CT26,C26,BC26	
75				CT27,C27,BC27,CT30,CT31	
76				BC37,BC38,BC39,BC40,BC41	
77				BC42,BC43,BC44,C46,BC46	
78				BC53,BC67,BC70,BC71,BC72	
79				BC73,BC74,BC75,BC76,BC77	
80				BC78,BC79,BC80,BC81,BC82	
81				BC83,BC84,BC85,PC5,C114	

Component List

Component List of Decoding Board (3)					
NO	Material No.	Name	Specification	Position	Qty
82				C22,C73,BC51,BC45,C81,C82	
83	3040-1334-0004	MLCC	0.33uF±20%,10V,0402,RoHS	CA5,CA7	2
84	3040-1474-0006	MLCC	0.47uF+80-20%,16V,0402,RoHS	C47,CP5	2
85	3040-1105-0014	MLCC	1uF+80-20%,16V,0402	CT24,CT29	2
86	3040-1103-0016	MLCC	0.01uF±10%,50V,0402,ROHS	CP6,BC13,BC22,CT28,CT35	5
87	3040-1104-0008	MLCC	0.1uF+80-20%,50V,0603	PC4	1
88	3040-1105-0013	MLCC	1uF+80-20%,16V,0603,ROHS	BC7,BC12,C16,C18,C20,BC21	6
89	3040-1225-0001	MLCC	2.2uF±20%,16V,0603,RoHS	C23	1
90	3040-1225-0003	MLCC	2.2uF±20%,16V,0805,RoHS	CA4,CA10,C8,CP1	4
91	3040-1475-0000	MLCC	4.7uF±20%,25V,0805,RoHS S	C5,BC87,BC88,CP12,C51	5
92	3040-1106-0007	MLCC	10uF+80-20%,16V,0805	C1,C70,CP2,CP15,C50	5
93	3040-2475-0030	Electrolytic Capacitor	4.7uF±20%,400V,Φ10×16mm,	EC17,	1
94			105°, High Frequency and Low Resistance, RoHS		
95	3040-2106-0041	Electrolytic Capacitor	10uF±20%,400V,Φ10×17mm	EC18	1
96	3040-2106-0011	Electrolytic Capacitor	10uF+80-20%,50V,Φ5×11mm	EC7	1
97	3040-2107-0010	Electrolytic Capacitor	100uF±20%,16V,Φ5×11mm	TC2,ECT2,EC2,TC18	4
98	3040-2107-0011	Electrolytic Capacitor	100uF±20%,25V, ,	ECA1	1
99			Φ6.3×11mm 105°RoHS		
100	3040-2227-0000	Electrolytic Capacitor	220UF±20%,10V,Φ6.3×5mm	EC1,EC3,	2
101	3040-2337-0000	Electrolytic Capacitor	330UF±20%,10V,Φ6.3×11mm,	ECV1	1
102	3040-2108-0030	Electrolytic Capacitor	1000uF±20%,10V,Φ8×14mm,105	EC4,	1
103	3040-2108-0000	Electrolytic Capacitor	1000UF±20%,10V,Φ8×14mm,RoHS	EC5	1
104	3040-3222-0001	High Voltage Capacitor	2200PF±20%,1KV	PC2	1
105	3040-1222-0007	H-V Ceramic Capacitor	2200PF±20% AC400V	PC1	1
106	3170-3004-0211	Chip Bead	0402,30Ω,100MHz,300mA,ROHS	FBT1	1
107	3170-3006-0306	Chip Bead	0603,60Ω,IDC:max800mA,	L28	1
108	3170-3006-0307	Chip Bead	300mA,400Ω,0603,ROHS	FB1,FB2,FB5,FB6,FB7,FB8	11
109				FB9,FB10,FB11,FB13,FB27	
110	3170-3006-0330	Chip Bead	0603,1KΩ,100MHz,200mA	FB29	1
111	3170-3008-0516	Chip Bead	0805,50Ω,100MHZ,600mA,RoHS	FB25,FB26,L34	3
112	3170-3008-0510	Chip Bead	0805,60Ω,100MHz,max800mA	FB28	1
113	3050-1302-2003	White Mounting Ceramic Inductor	2.2nH±5%,0402, Appointed Supplier	LT4	1
114	3050-1315-0003	White Mounting Ceramic Inductor	15nH±5%,0402, Appointed Supplier	LT2,LT1	2
115	3080-3217-5100	Converter	BW21S7511A01TF,0805,75Ω,ROHS	TT1	1
116	3050-1022-0014	Chip Power Inductor	2.2uH±30%,ISAT=1.6A	L6,L11	2
117	3050-1100-0061	Chip Power Inductor	10uH±20%,WBD6730100MR,2.3A,	L3,	1
118			ROHS2.5A,ROHS		
119	3050-1100-0002	Vertical Inductor	10uH±10%,2A,Φ8×12mm,ROHS	PL2	1
120	3050-1220-0020	Chip Power Inductor	22uH±30%,0.4A,SMTDRRI3D16-220	LT6	1

Component List

Component List of Decoding Board (4)					
NO.	**Material No.**	**Name**	**Specification**	**Position**	**Qty**
122	3050-3683-0001	Choking Coil	68mH±10%,0.15A,UU9.8,RoHS	PL1	1
123	3050-1315-1007	White Mounting Ceramic Inductor	150nH±5%,0603	LT3	1
124	3150-1134-1112	Transformer	KB1341-11863A,ROHS	PT2	1
125	3060-1141-4802	Chip Diode	1N4148,LL-34 RoHS	D1	1
126	3060-1990-0000	Chip Diode	BAV99,SOT-23	ET2	1
127	3060-1104-0000	Diode	FR104 DO-41	PD9	1
129	3060-1107-0000	Diode	FR107 DO-41	PD7	1
130	3060-1140-0700	Diode	IN4007 DO-41	PD1,PD2,PD3,PD4	4
131	3060-1360-0000	Diode	SB360,DO-27,RoHS	PD8	1
132	3060-3392-0000	LED	Φ3	LED5	1
133	3060-5855-0001	SMD Audion	S8550,SOT23	Q2	1
134	3060-5239-0400	SMD Audion	2N3904 SOT23	Q6,Q7,Q9,Q11,Q3	5
135	3060-5239-0600	SMD Audion	2N3906 SOT23	Q5,	1
136	3060-5232-3000	SMD Audion	Si2323DS-SOT23,ROHS	Q8,Q10	2
137	3070-1243-8000	Receiver Head	HL-2438M,38KHz	IR1	1
138	3070-1382-1000	Chip IC	M3821-ALCA,LQFP-128-Pin,ROHS	U1	1
139	3070-1312-4003	Chip IC	A3R12E40CBF-AH,32M×16,84-ball	U5	1
140			FBGA,ROHSROHS		
141	3070-1253-2003	Chip IC	GD25Q32BSIG,SOP8,32M,208MIL,	U3	1
142	3070-1240-8501	Chip IC	APS2408ES5-ADJ,SOT23-5L,ROHS	UP2,U6	2
143	3070-1813-6100	IC	PN8136,DIP-7,ROHS	U13	1
144	3070-1817-0001	Opticalcoupler	BPC-817B DIP4	U14	1
145	3070-3431-0000	Regulator IC	TL431 TO-92	U15	1
146	3070-1603-0000	Chip IC	MxL603,QFN-25	UT1	1
147	3070-1890-5000	Chip IC	SGM8905,MSOP-10	UA1	1
148	3070-1295-3000	Chip IC	AP2953,SOP8,ROHS	U19	1
149	3160-9383-1101	Concentric Socket	AV3-8.3-11, Yellow, white and red, without earth tag	JK2	1
150	3162-0104-2800	HDMI Socket	10428-01944	J2	1
151	3160-5000-0002	USB Socket	ZX-USBSOCKET-A,ROHS	J1	1
152	3120-1102-0007	Fuse	Slow Type ,1A,250V	F2	1
153	3110-2270-0600	Oscillator	27MHz,30PPM,fundamental wave 49S	Y1	1
154	3110-2160-0600	Crystal	16MHz, fundamental Wave 49S,20PPM,RoHS	YT1	1
155	3200-3010-0000	Varnished Tube	Φ1.0		
156		Varnished Tube	Φ1.0×5.5mm×2	LED5	11
157					
158					
159					
160					
161					
162					