DVB-Terrestrial Receiver

SMP136HDT2+SMP011HDT2

Service Manual

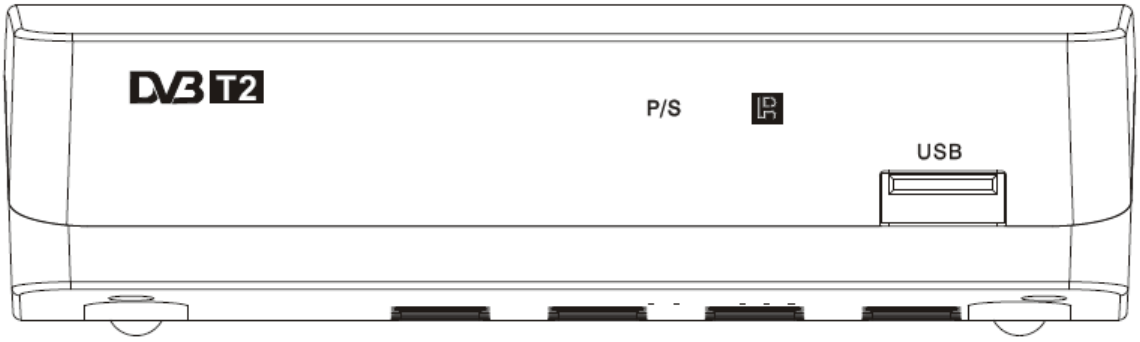

This service manual should be used with the User Manual together.
Please read this Service Manual and User Manual carefully before service this product.

Contents

Safety Instructions

Generally Guide

1. Please check electric circuits before maintenance and change the damaged or over heated components if short-circuit has been found.
2. Please check all protective devices have been installed well after maintenance, like whether insulation covering and paper has been installed well or not.
3. In order to avoid electric shock ,please proceed following electrical leakage tests after maintenance.

Low Potential Leakage Testing

Take out power cord from an AC outlet and connect a length of wire between the two leads of the plug.

Use Gear R x 10K of the voltmeter to measure the resistance between shorted-out AC plug and exposed metallic parts like screw cap, control shaft etc. which shall be infinite.

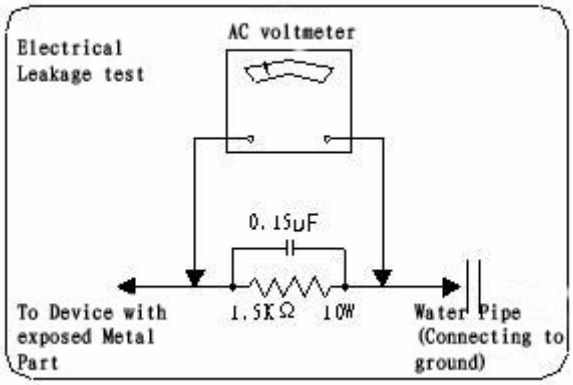

Picture 1

High Potential Leakage Testing

As shown in Picture 1, connect a resistor of 1.5K, 10W and capacitor of 0.15 uF between exposed metallic part and well grounded devices (water pipe etc.).

Plug AC power cord directly into the AC socket. Do not use insulated transformer to test.

Use 1000 Ohm/V or more sensitive AC voltmeter to measure AC voltage of the resistor.

Turn over the AC jack and plug into the socket again to iterate the inspection as above.

Inspect the voltage of the resistor between other exposed metallic parts and the earth in the same way.

Any parts' voltage of the resistor should not over 0.75Vrms. A leakage testing machine with voltage over 2,500 V can also be used for this inspection in which case the electric leakage should not be over 0.5mA. When the leakage exceeds that limit, electric shock may occur. Please check and repair again before hand it over to users.

4. Protect Electrostatic-Sensitive Devices from Electrostatic Discharge

Some solid states made of semiconductors materials can be easily damaged by commonly static charges,

those components are usually called electrostatic-sensitive devices. Such like integrated circuits, laser diodes and field effect devices. The following tips will help you to reduce the impacts on those components while electrostatic discharging.

1.Please release static which build-up on human body before handling electrostatic-sensitive devices by using grounded tools. The antistatic strap which can be found in the market will be a good choice.

2.Please install the electrostatic-sensitive devices on conductor products such as aluminum foil to prevent static build-up after disassembling from this DVT receiver.

3.The soldering iron must be earthed while soldering and unsoldering the electrostatic-sensitive devices.

4.Only antistatic solder can be used for electrostatic-sensitive devices disassembly. The electrostatic-sensitive devices will be damaged by static without ESD prevention solder while disassembling.

5.Do not use Freon Volatile which may damage the electrostatic-sensitive devices by discharging static.

6.Do not take the new electrostatic-sensitive devices from the antistatic protection package unless you are ready for installation. (Most electrostatic-sensitive devices will be packed with anti-static foam, foil or similar conductive materials. And a lead wire to prevent short circuit.)

7.Please contact the core or circuit parts of the device to be installed with ESD protection package before carry out the new electrostatic-sensitive devices from it. And make sure no power supply on the device and remember other precautions.

8.Try to reduce body movements while assembling or disassembling electrostatic-sensitive devices. (Clothes made of fabrics will build-up static by attrition. Feet lifts up from floor will also build-up static.)

Electrical Specifications

A Audio Section （MPEG-1 Layer Ⅱ, R. L Track Output）				
No.	ITEM	UNIT	REQUIREMENTS	Test Environment
1	Audio Output Level	V	1.0～2.0	Output impedance is 10KΩ 1KHz 0dB
2	Frequency Characteristics	dB	+1/-2.0	20Hz-60Hz
			±0.5	60Hz-17.5KHz
			+1/-3	17.5KHz-20KHz
3	S/N	dB	≥70	1KHz 0dB weighting
4	L/R Channel Separation	dB	≥60	N-CBAR100.TS f= 1KHz P-CBAR75.TS
5	L/R Channel Level Difference	dB	≤0.5	60Hz-18KHz
6	Audio THD	%	≤1	60Hz-18KHz
7	Digital Coaxial Output Level	Vp-p	0.5±20%	75Ω Load

B Video (MPEG-2MP@ML)					
1	Output range	Video	Vp-p	1.0±15%	75Ω Load
		Brightness/RGB		0.7±10%	
		Sync		0.30±8%	
2	Frequency Characteristics (75Ω)		dB	±0.5	0.5-4.8MHz
			dB	≤+0.5/-1.0	4.8-5.0MHz
			dB	≤+0.5/-4	5.0-5.5MHz
3	Brightness S/N		dB	≥56	WTD 5MHz
4	Chromatic S/N		dB	AM≥58	Load 75Ω
				PM≥51	
5	Differential gain（DG）		%	≤±5	Load 75Ω
6	Differential phase（DP）		°	≤±5	Load 75Ω
7	Brightness non-linear distortion		%	≤5	Load 75Ω
8	△τ chrominance-luminance delay inequality		ns	≤±30	Load 75Ω
9	△K Chrominance-luminance Gain Inequality		%	≤±5	Load 75Ω
10	Brightness Waveform Distortion		%	≤3	Load 75Ω
11	Chrominance Subcarrier Offset is not more than		Hz	200	Load 75Ω

C Demodulation			
1	Input Frequency Range	MHz	174~230MHz,470～862MHz (VHF/UHF)
2	Input Level Range	dBm	-75～-20
3	Frequency Offset	MHz	-0.4MHz~+0.74MHz

D Power Supply (~100-240V)				
1	+5V	mA	1500	5%
2	+5V Active Antenna Amplifier	mA	30	5V overload protection

E Others				
1	Free Fall	Meets QJ/ET08.02-2005 Standards		
2	Remote Control Distance	M	≥8	In line
			≥6	With range of ±30°
3	Rated Power Consumption	W	8	

Mechanical Exploded View Drawing

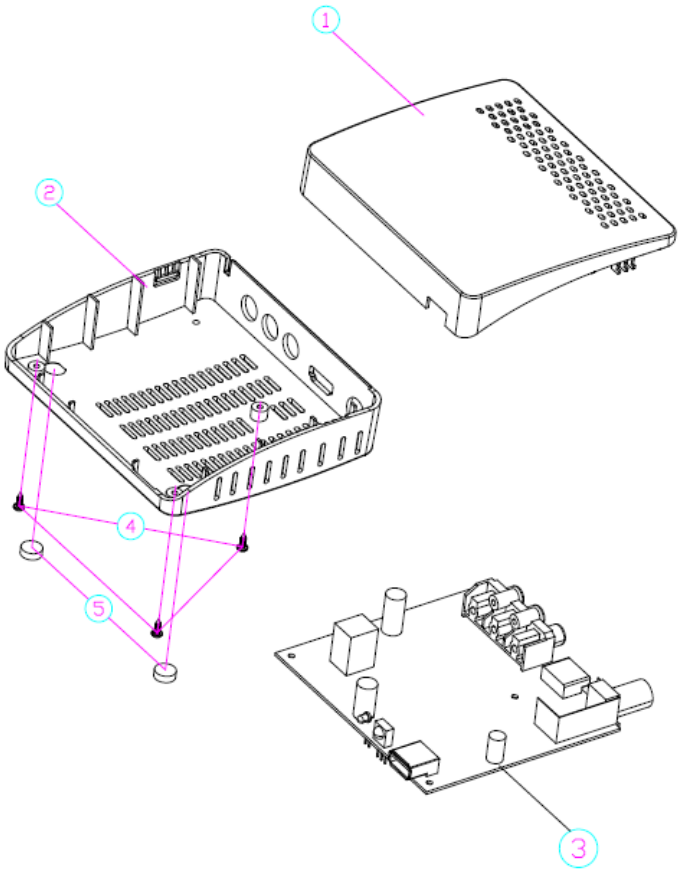

机械部分零件表

位号	料 号	名 称	数量	备 注
1	4110-1811-003H	上盖	1	透明ABS
2	4111-1811-013H	底壳	1	ABS
3	2104-2034-N00H	解码板	1	
4	3211-2008-0005	螺 钉 ST2×8PANi	3	主板/底壳
5	3000-4000-0800	脚 垫	2	中密度海绵, 黑色

Mechanical Parts List

NO.	Part No.	Part Name	Qty	Notes
1	4110-1811-003H	Front Panel	1	Transparent ABS
2	4110-1811-013H	Bottom Cover	1	ABS
3	4111-1656-019H	Decoding Board	1	
4	3211-2008-0005	Screws	3	Mainboard/ botton cover
5	3000-4000-0800	Feet Pad	2	Rubber, Black

Packaging and Accessories

包装和附件

1. 分解图

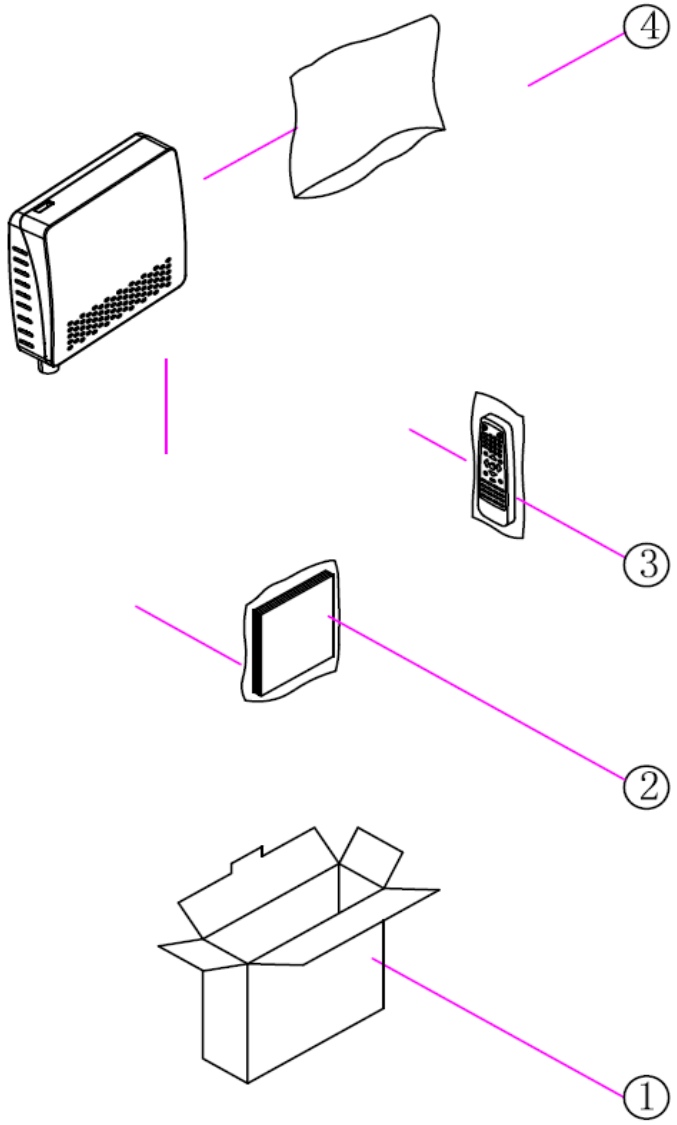

2. 材料清单

位 号	编 号	名 称 规 格	数 量
1	4401-1656-000H	白 盒	1
2	ST2.025.0674SS	说明书	1
3	2301-1555-000H	遥控器	1
4	4413-1812-1100	气泡袋 180×210mm	1

Packaging Exploded View Drawing

Material List

NO.	Material No.	Name	Qty
1	4401-1656-000H	White Box	1
2	ST2.025.0672SS	User Manual	1
3	2301-1555-000H	Remote Control	1
4	4413-1812-1100	Bubble Bag 180*210mm	1

Appendix 1 Flowchart and Circuit Diagram

Flowchart

Wiring Diagram

Circuit Diagram of Decoding Board

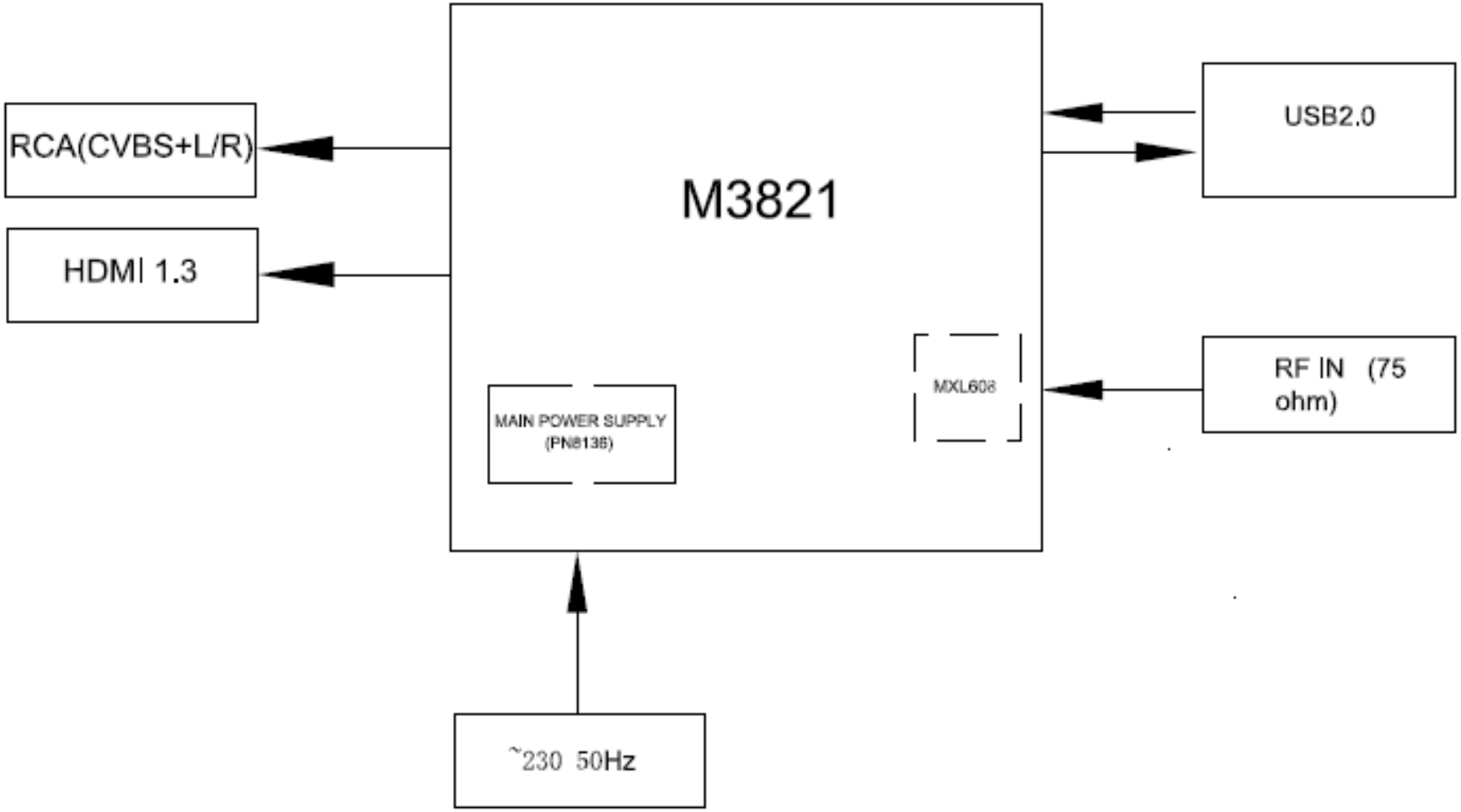
RCA(CVBS+L/R)
HDMI 1.3
M3821
MAIN POWER SUPPLY
(PN8136)
MXL608
USB2.0
RF IN (75
ohm)
~230 50Hz

Flowchart

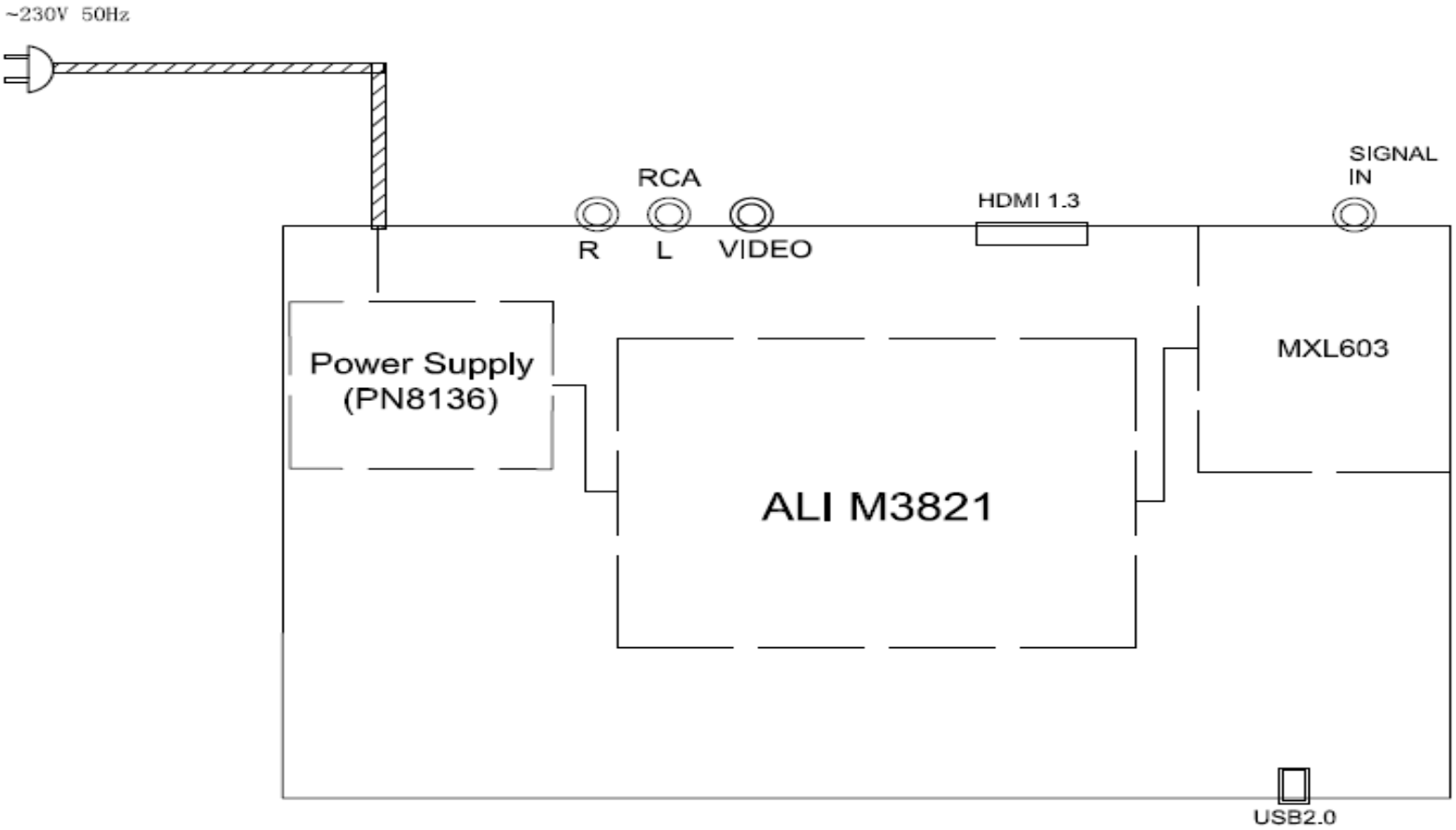

Wiring Diagram

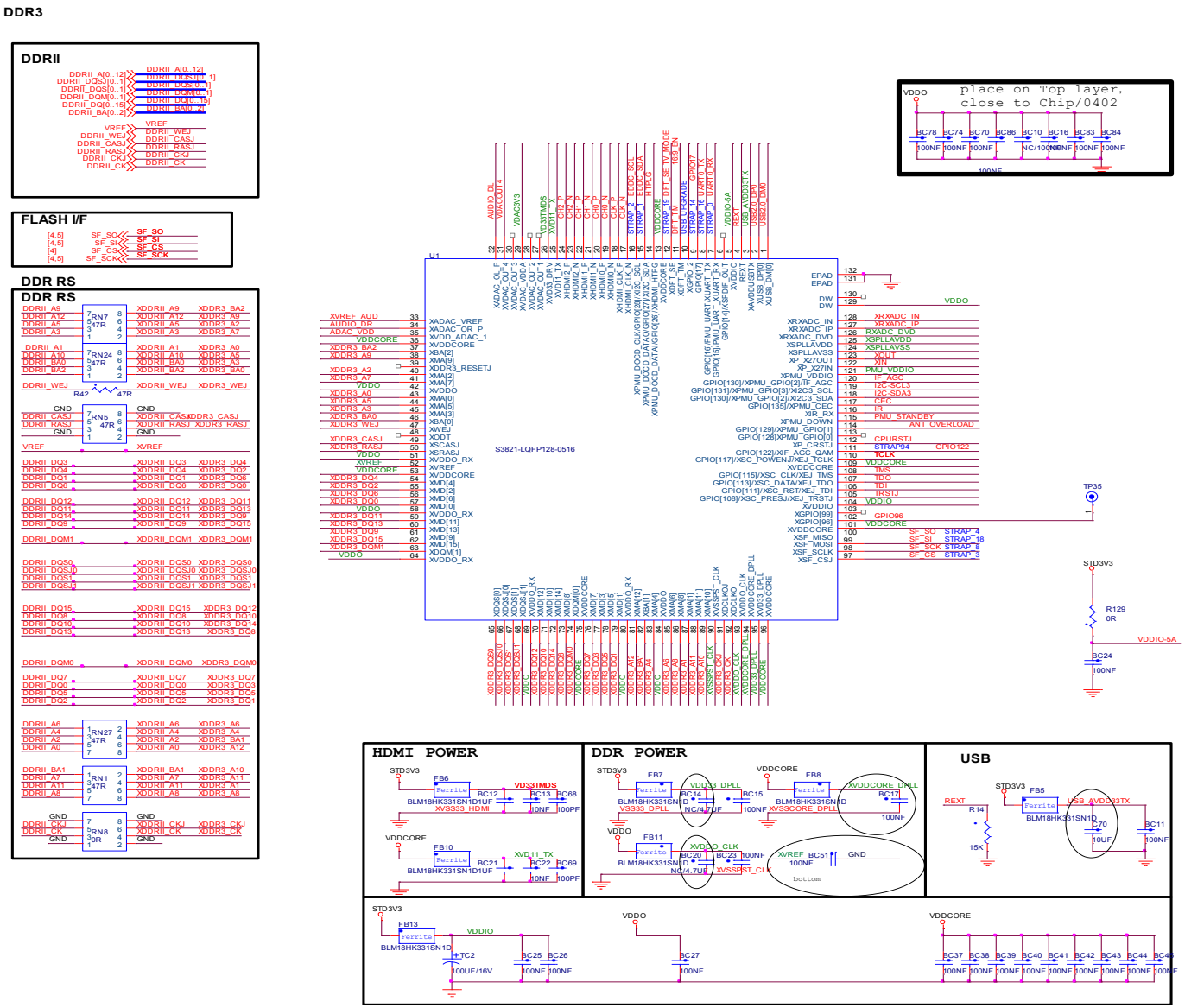

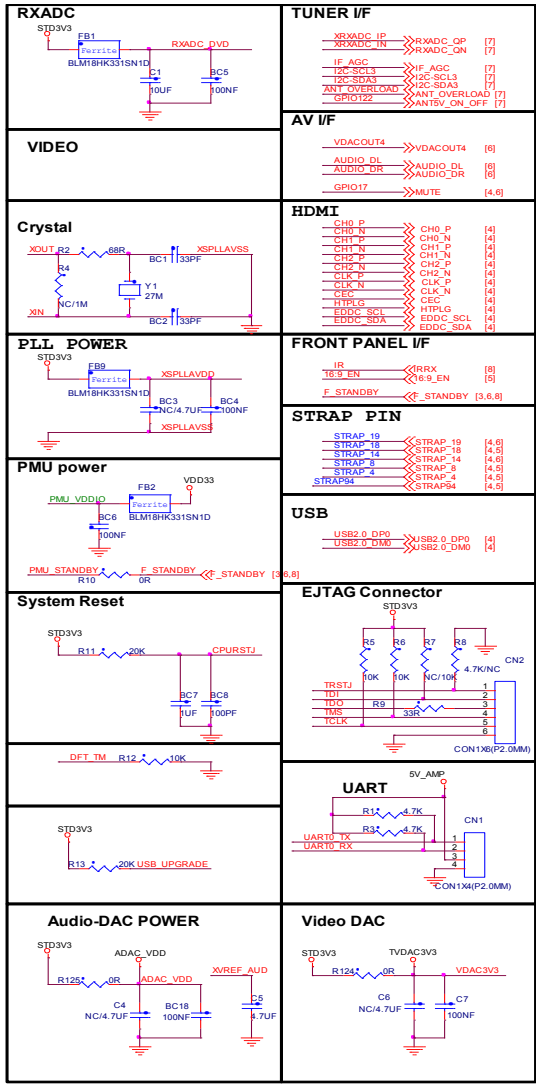

Decoding Board Schematic Diagram (1)

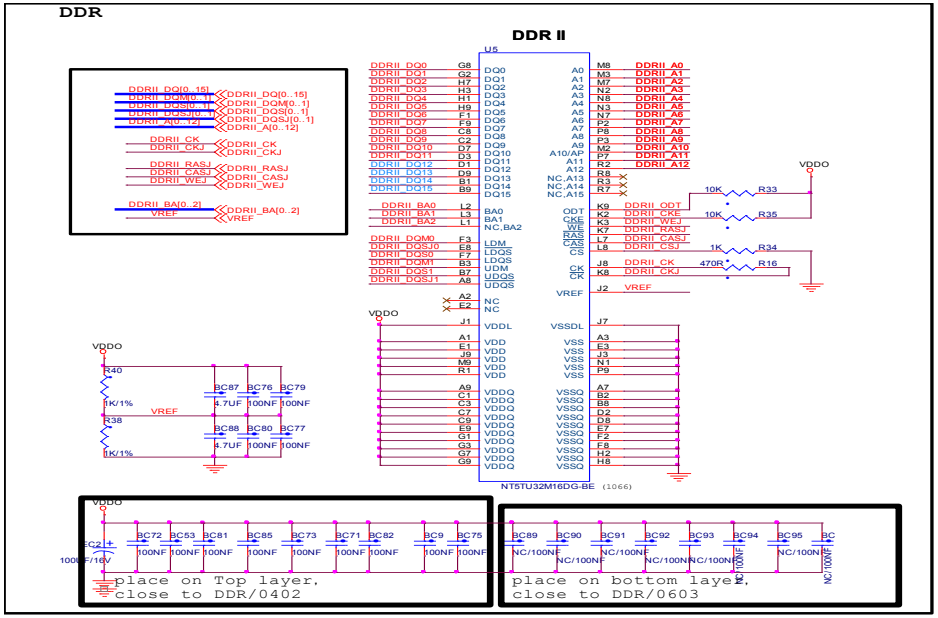

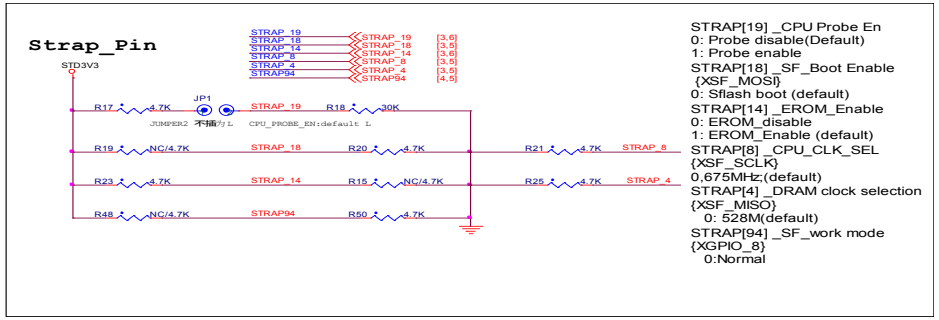

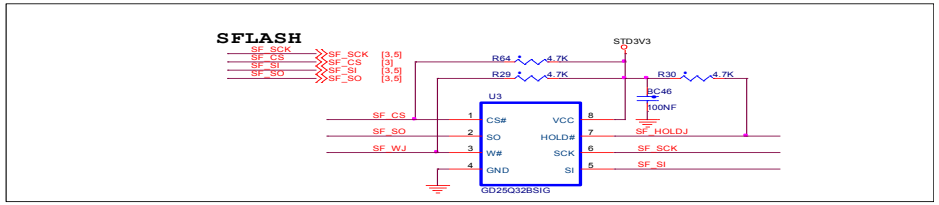

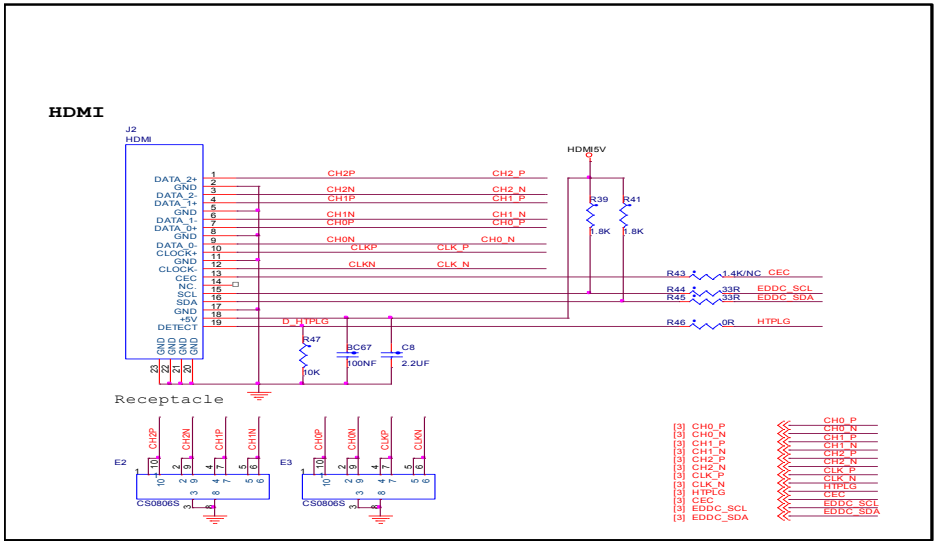

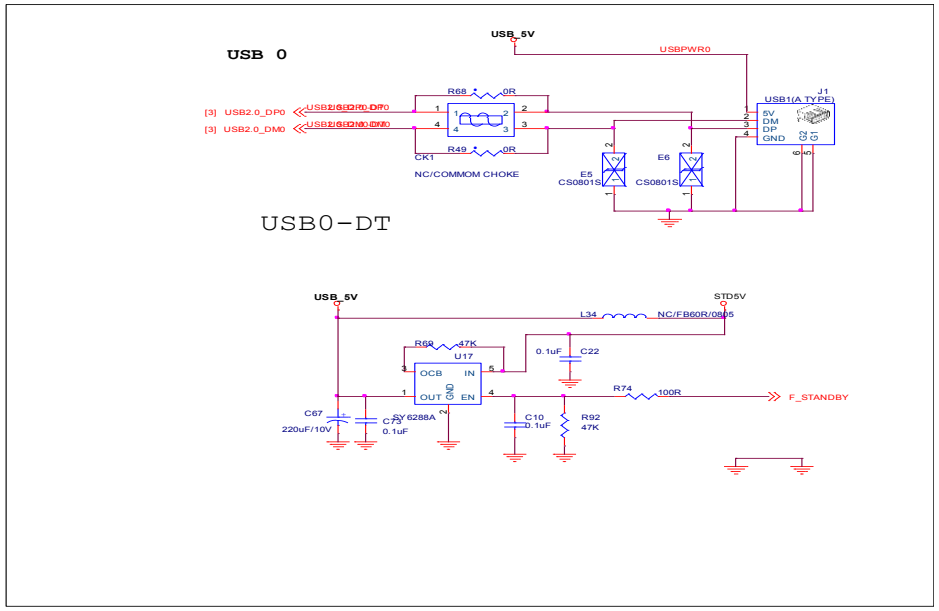

Decoding Board Schematic Diagram (2)

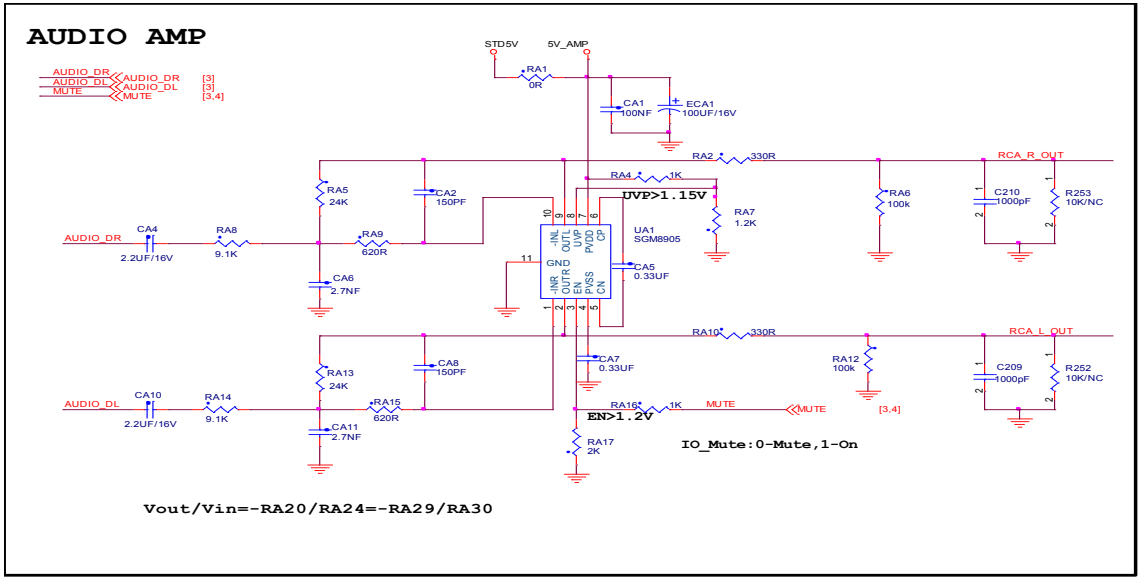

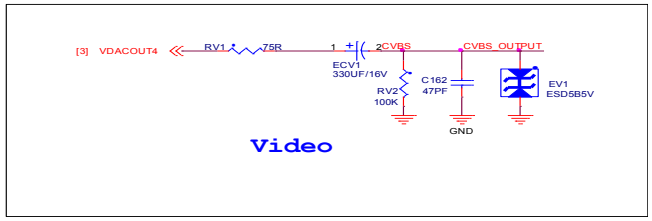

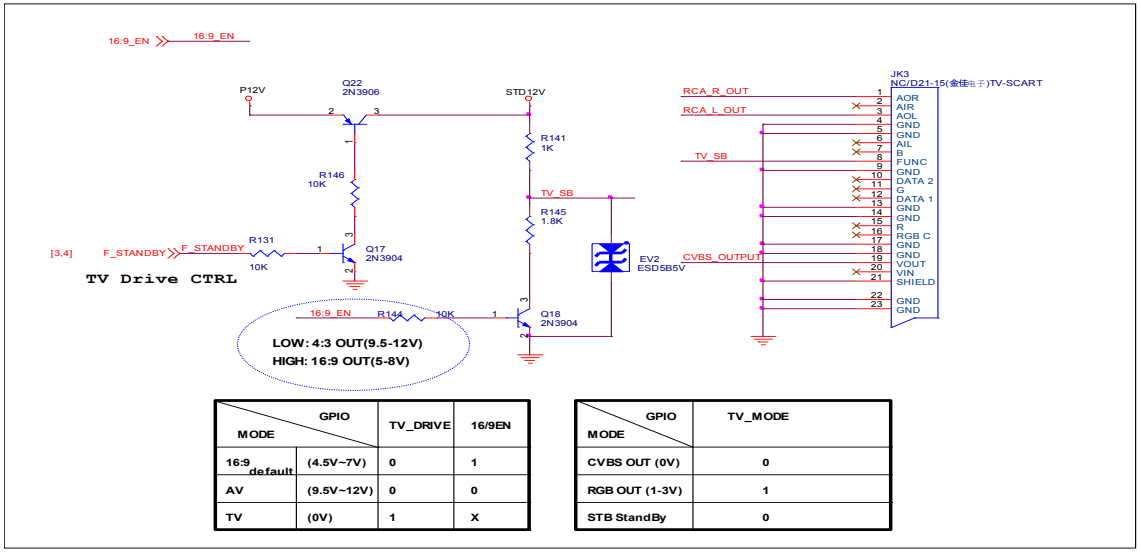

MODE \ GPIO		TV_DRIVE	16/9EN
16:9 default	(4.5V~7V)	0	1
AV	(9.5V~12V)	0	0
TV	(0V)	1	X

MODE \ GPIO	TV_MODE
CVBS OUT (0V)	0
RGB OUT (1-3V)	1
STB StandBy	0

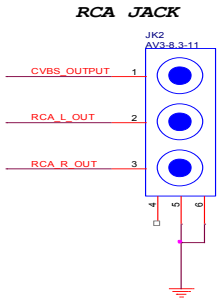

Decoding Board Schematic Diagram (3)

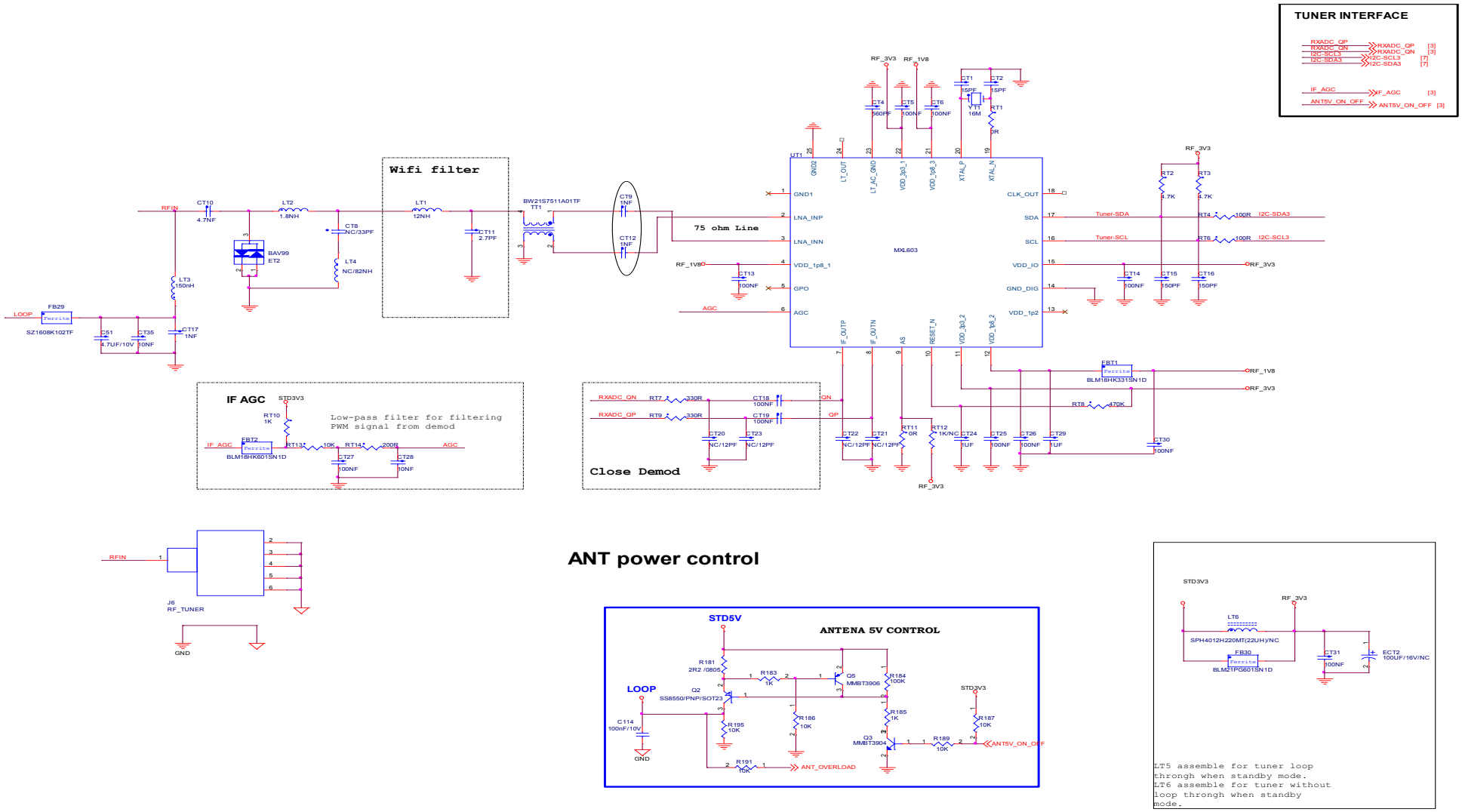

Decoding Board Schematic Diagram (4)

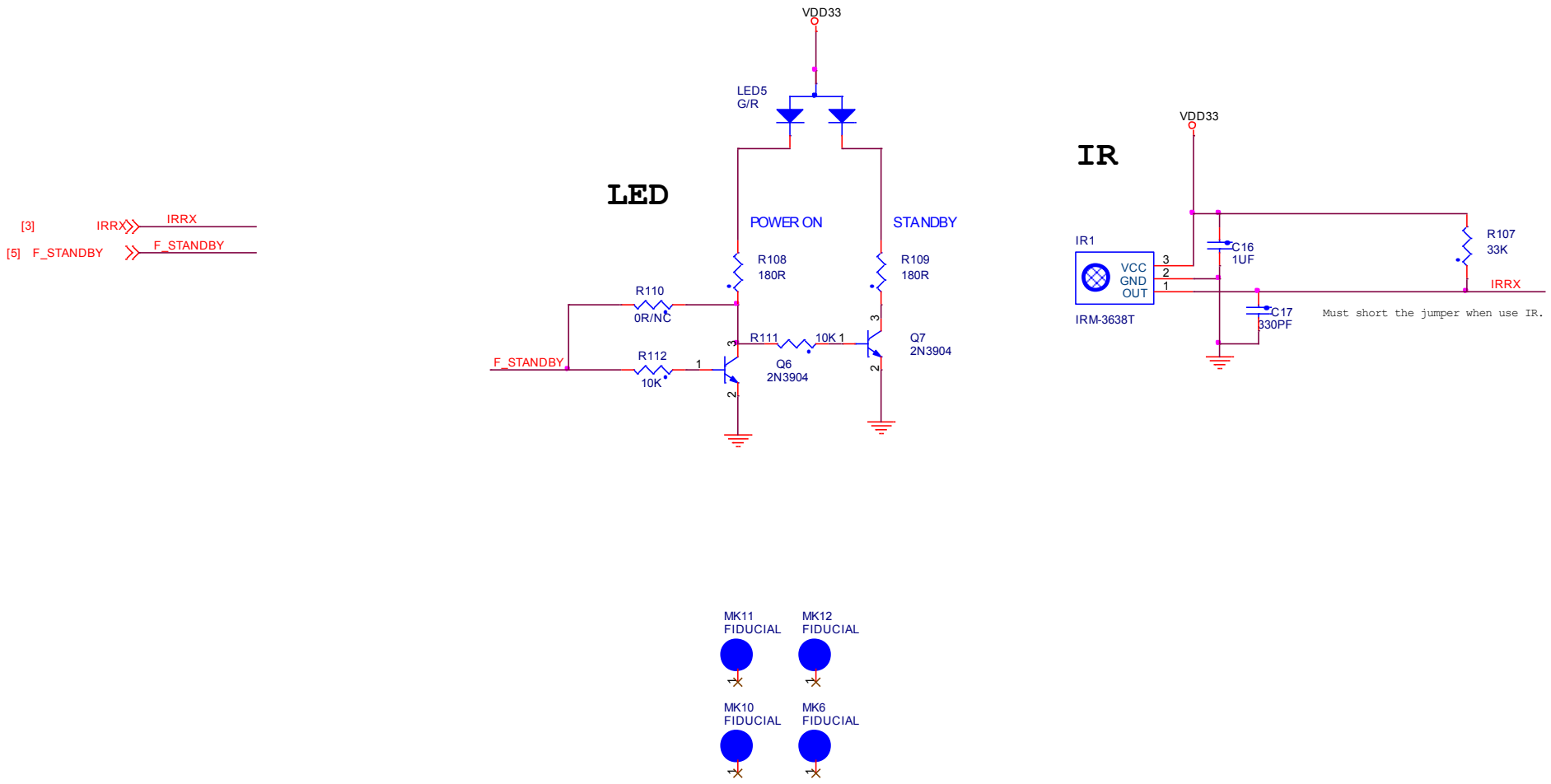

Decoding Board Schematic Diagram (5)

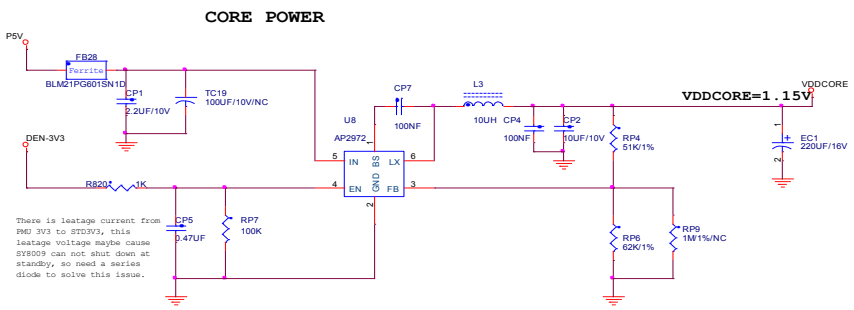

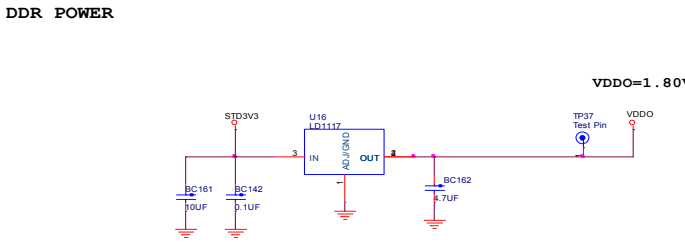

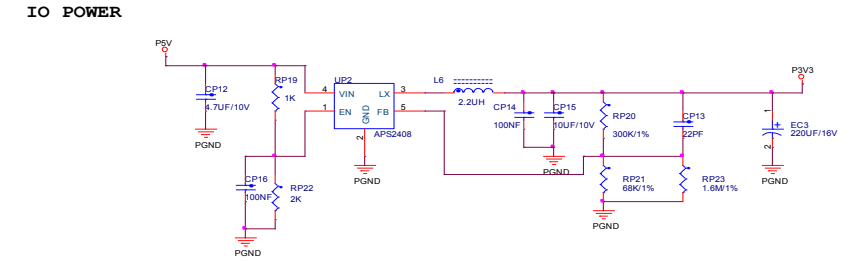

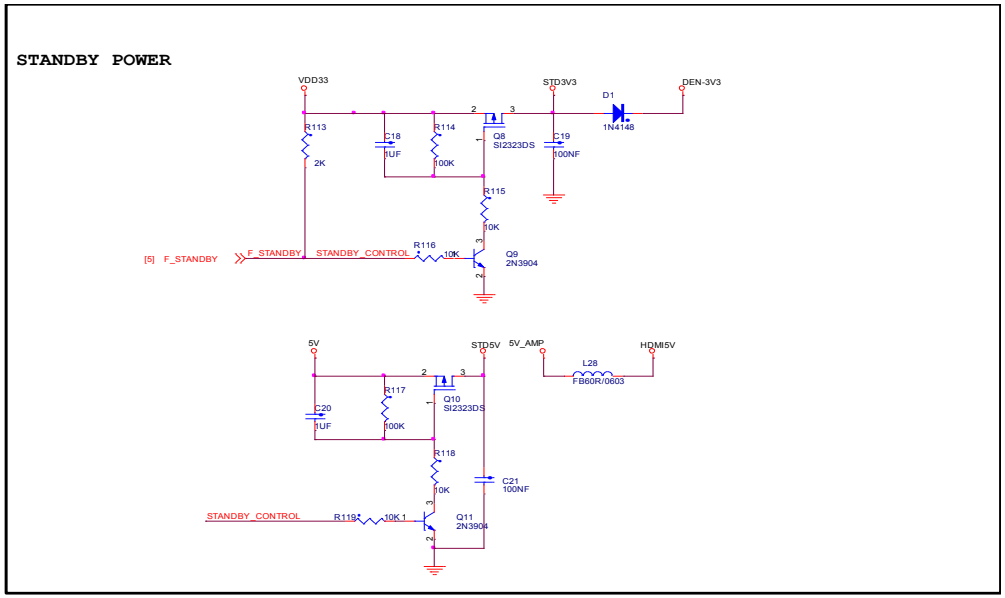

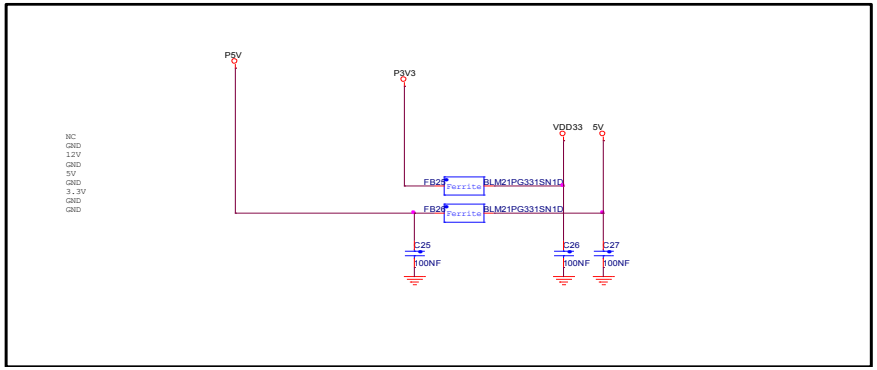

Decoding Board Schematic Diagram (6)

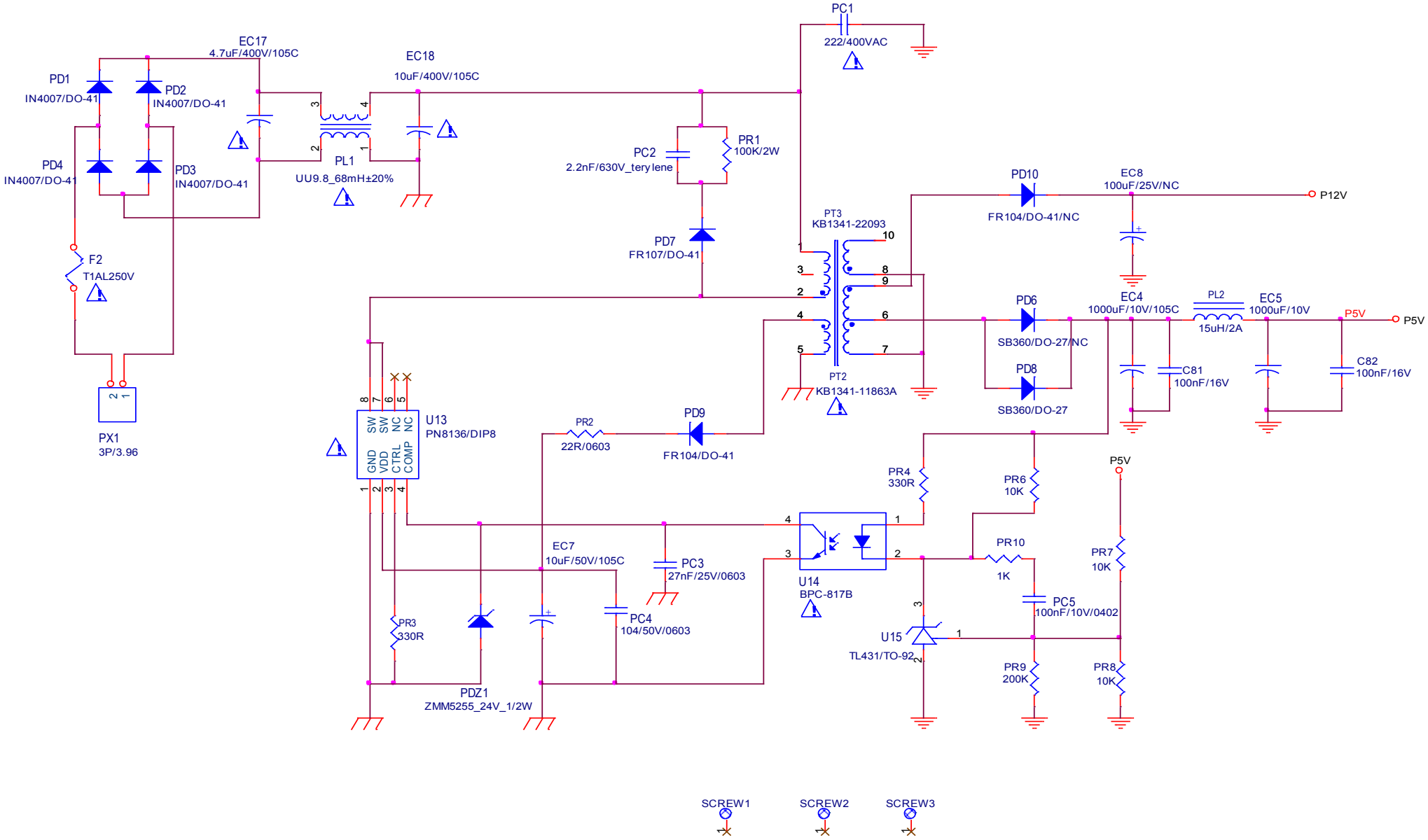

Decoding Board Schematic Diagram (7)

Appendix 2 Silkscreen of PCB

Silkscreen of Decoding Board Top

PCB Diagram of Decoding Board Top

Silkscreen of Decoding Board Bottom

PCB Diagram of Control Board Bottom

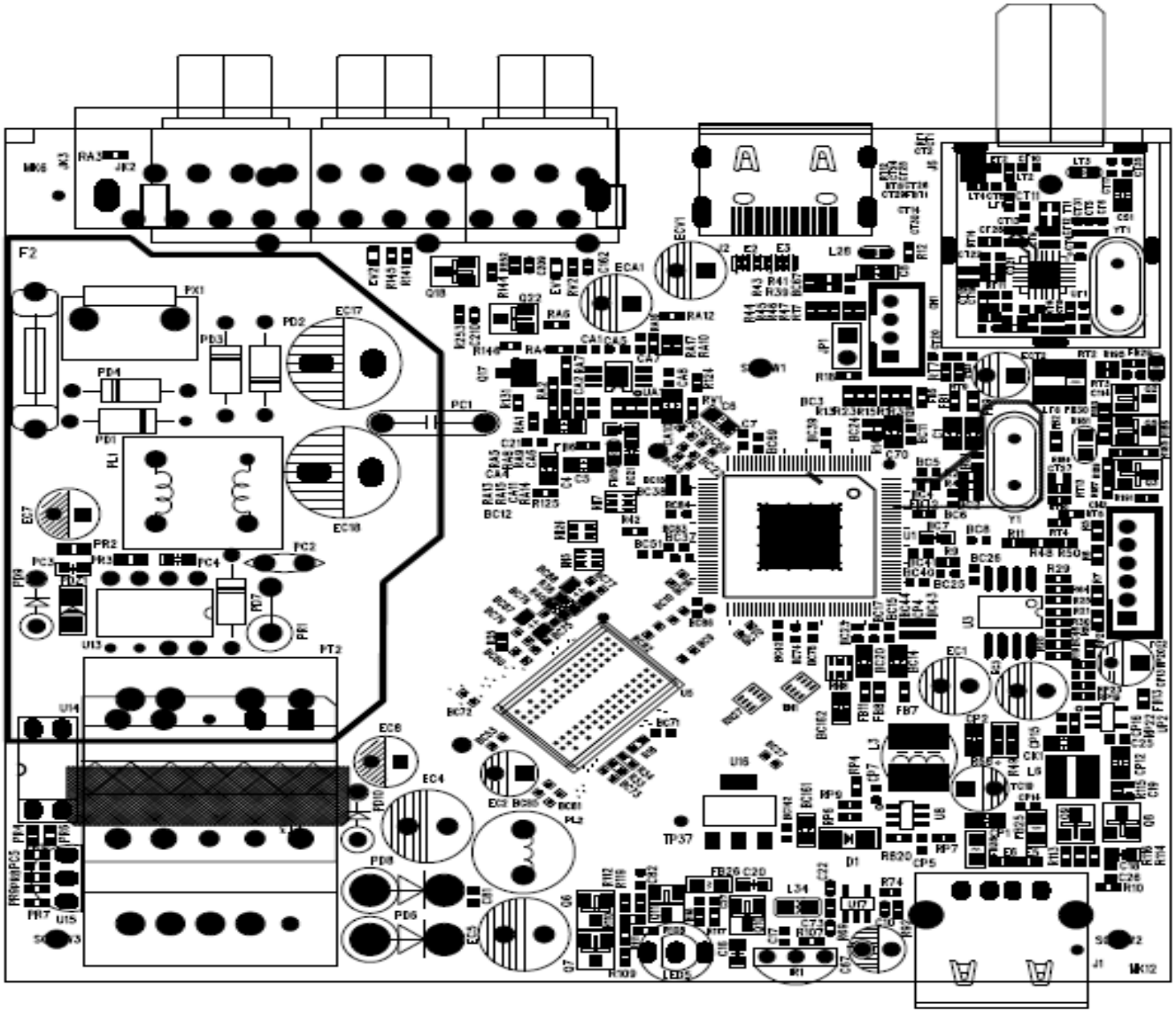

Silkscreen of Decoding Board Top

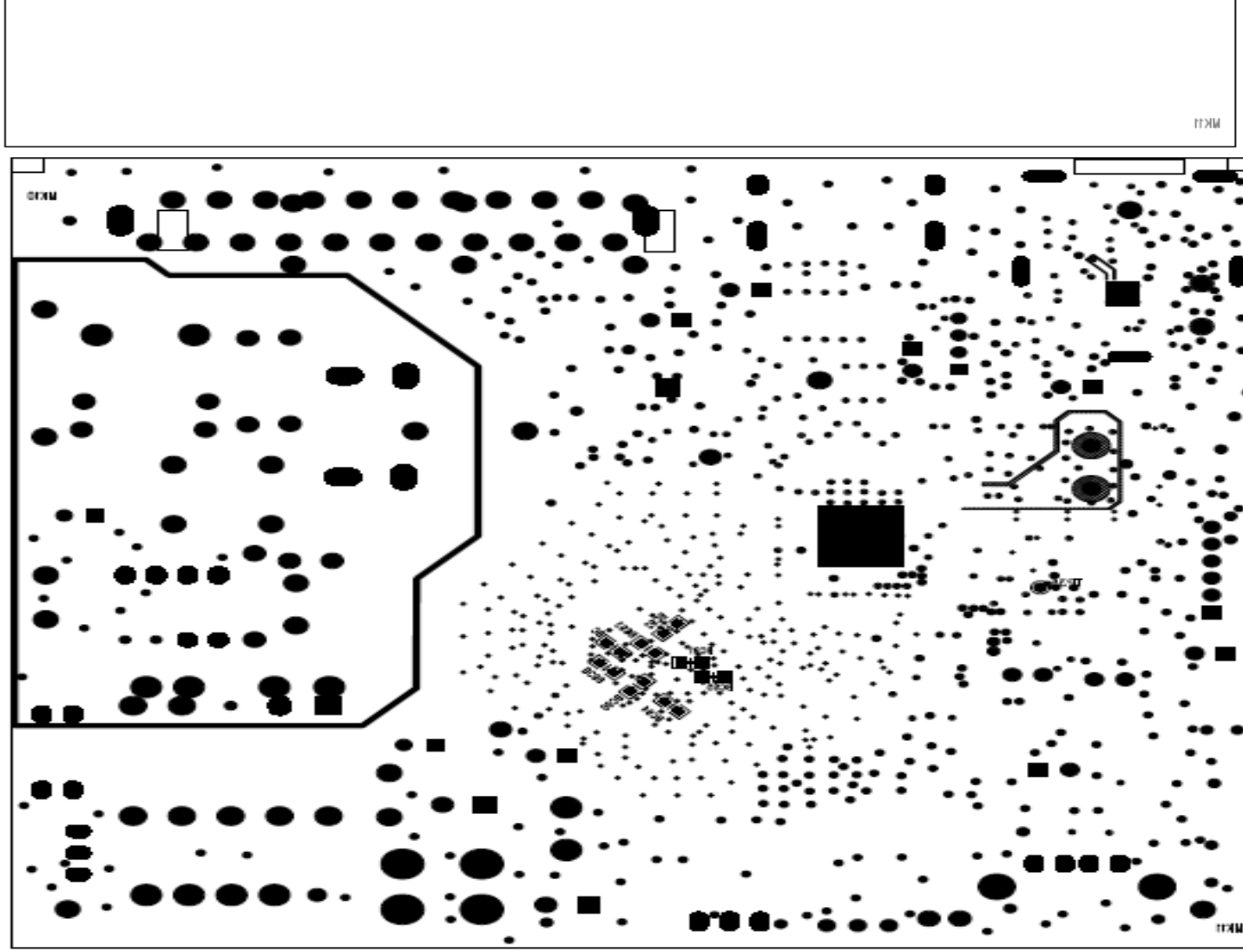

Silkscreen of Decoding Board Bottom

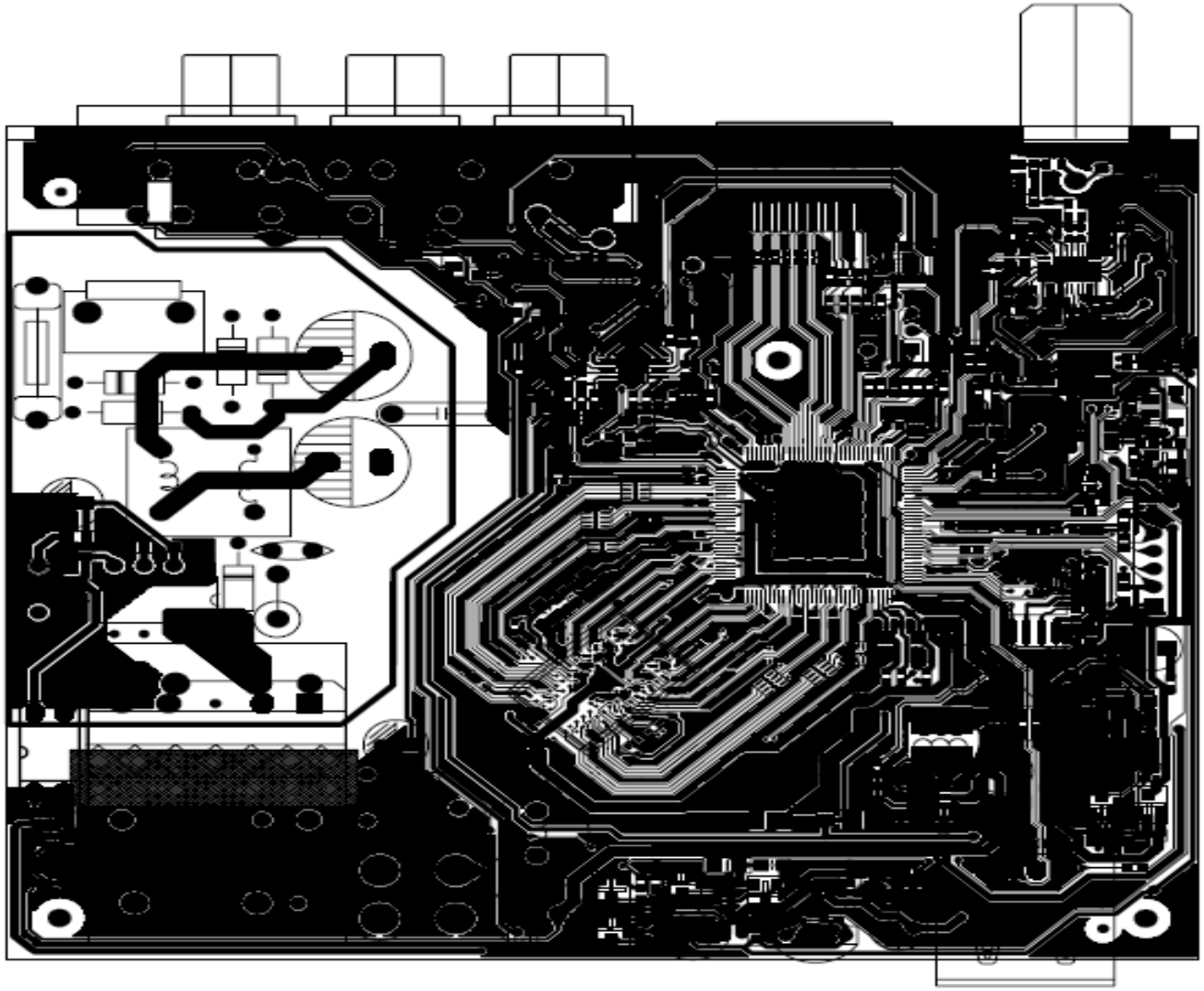

PCB Diagram of Decoding Board Top

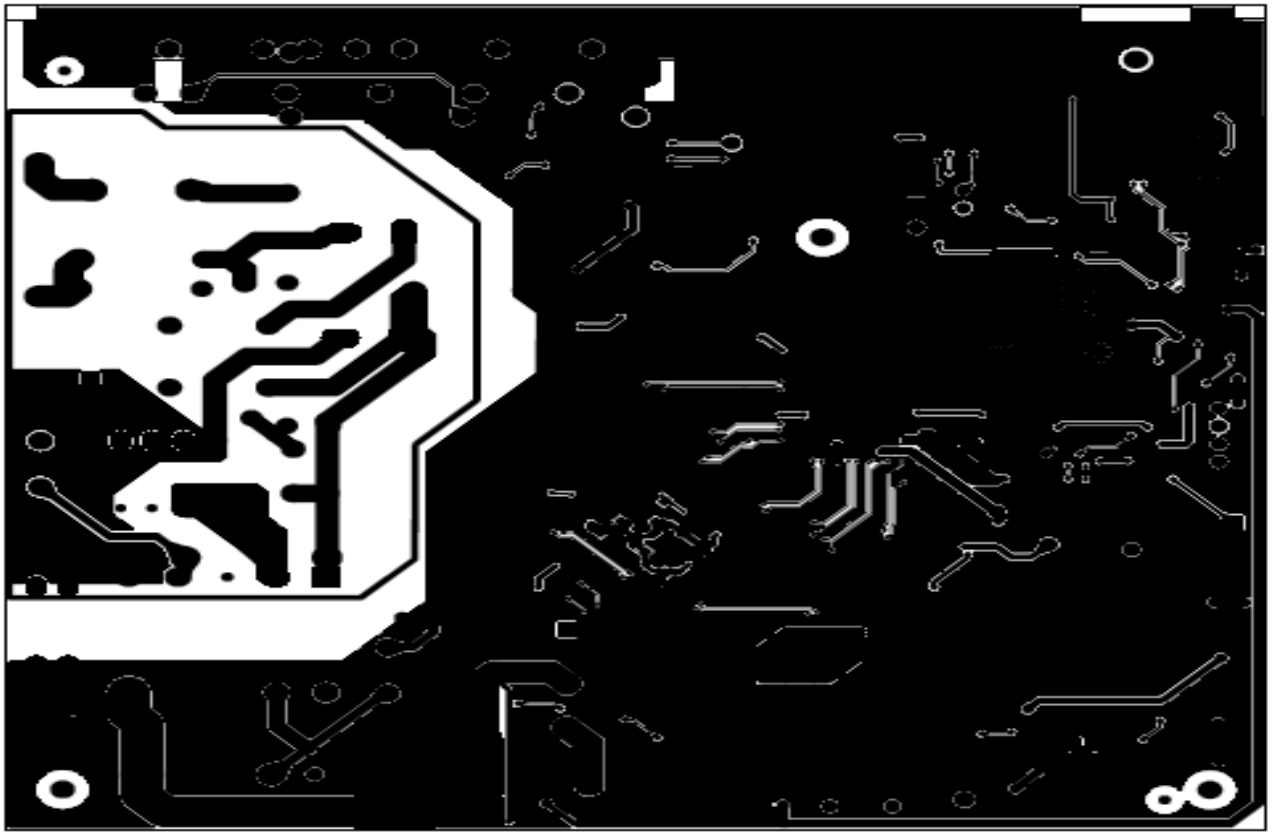

PCB Diagram of Control Board Bottom

Appendix 3 Component List

Component List of Decoding Board

Component List

Component List of Decoding Board					
No.	**Material No.**	**Name**	**Specification**	**Position**	**Qty**
1	4208-2034-002H	decoding deck, printing plate	ST7.820.1506,102×93×1.2mm,		1
2			Double-sided board, ROHS		
3	3260-1000-2004	Heat Sink	ST7.061.0097 Aluminum ROHS	On the top of U1	1
4			20×20×16mm ROHS		
5	4303-1599-000H	Shield Cover	ST6.430.0024,0.3mm Tinplate,, ROHS	J6	1
6	4303-0762-001H	Shield Cover	ST6.430.0016,0.3mm Tinplate,	tuner	1
7	3020-1000-0004	SMD Resistor	0Ω±5%,1/16w,0402,RoHS	RT1,R10,RT11,R46,R49,	20
8				R68,R124,R125,R129,FB1	
9				FB2,FB5,FB6,FB7,FB8	
10				FB9,FB11,FB13, RA1,RA3	
11	3020-1330-0007	SMD Resistor	33Ω±5%,1/16w,0402	R9,R44,R45	3
12	3020-1470-0002	SMD Resistor	47Ω±5% 1/16W 0402	R42	1
13	3020-1750-0007	SMD Resistor	75Ω±5%,1/16w,0402	RV1	1
14	3020-1680-0004	SMD Resistor	68Ω±5%,1/16w,0402	R2	1
15	3020-1101-0011	SMD Resistor	100Ω±5%,1/16w,0402	RT4,RT6,	2
16	3020-1181-0003	SMD Resistor	180Ω±5%,1/16w,0402,RoHS	R108,R109	2
17	3020-1201-0003	SMD Resistor	200Ω±5%,1/16w,0402,RoHS	RT14	1
18	3020-1331-0007	SMD Resistor	330Ω±5%,1/16W,0402,ROHS	PR4,RA2,RT7,RT9,RA10	5
19	3020-1471-0003	SMD Resistor	470Ω±5%,1/16w,0402	R16,	1
20	3020-1621-0001	SMD Resistor	620Ω±5%,1/16w,0402,RoHS	RA9,RA15	2
21	3020-1102-0000	SMD Resistor	1KΩ±1%,1/10w,0603,RoHS	R38,R40,	2
22	3020-1102-0005	SMD Resistor	1K±5%,1/16W,0402	RA4,RT10,PR10,RP19,	8
23				R34,R183,R185,R820	
24	3020-1122-0003	SMD Resistor	1.2K±5%,1/16w,0402	RA7	1
25	3020-1182-0003	SMD Resistor	1.8KΩ±5%,1/16w,0402,RoHS	R39,R41,	2
26	3020-1202-0005	SMD Resistor	2K±5%,1/16w,0402	RP22,R113	2
27	3020-1332-0003	SMD Resistor	3.3KΩ±5%,1/16W,0402,ROHS	RA17	1

28	3020-1472-0003	SMD Resistor	4.7K±5%,1/16w,0402	R1,RT2,RT3,R3,R17,R20,R21,	13
29				R23,R25,R29,R30,R50 R64	
30	3020-1512-0003	SMD Resistor	5.1KΩ±5%,1/16w,0402,RoHS	RA16	1
31	3020-1103-0005	SMD Resistor	10K±5%,1/16w,0402	R5,R6,PR6,PR7,PR8,R12	23
32				RT13 ,R33,R35,R47,R111	
33				R112,R115,R116,R118,R119	
34				R186,R187,R189,R191,R195	
35				RA8,RA14	
36	3020-6150-0300	SMD Resistor	15KΩ±1%,1/16W,0402,ROHS	R14	1
37	3020-1203-0003	SMD Resistor	20KΩ±5%,1/16w,0402	R11,R13	2
38	3020-1243-0001	SMD Resistor	24KΩ±5%,1/16w,0402	RA5,RA13	2
39	3020-6300-0300	SMD Resistor	30KΩ±1%,1/16w,0402,RoHS	R18	1
40	3020-6330-0300	SMD Resistor	33KΩ±1% 1/16W 0402	R107	1
41					
42	3020-6680-0300	SMD Resistor	68KΩ±1%,1/16w,0402,RoHS	RP21	1
	3020-6510-0300	SMD Resistor	51KΩ±1%,1/16W,0402,RoHS	RP4	1
	3020-6620-0300	SMD Resistor	62KΩ±1%,1/16W,0402,ROHS	RP6	1

Component List

Component List of Decoding Board					
No.	**Material No.**	**Name**	**Specification**	**Position**	**Qty**
1	3020-1104-0006	SMD Resistor	100K±5%,1/16w,0402	RV2,RA6,RP7,RA12,R114	7
2				R117,R184	
3	3020-6200-0400	SMD Resistor	200K±1%,1/16w,0402	PR9	1
4	3020-6300-0400	SMD Resistor	300KΩ±1%,1/16W,0402,ROHS	RP20	1
5	3020-6470-0402	SMD Resistor	470KΩ±1%,1/16w,0402,RoHS	RT8	1
6	3020-1165-0000	SMD Resistor	1.6MΩ±5%,1/16W,0402,ROHS	RP23	1
7	3020-1220-0001	SMD Resistor	22Ω±5%,1/10w,0603	PR2	1
8	3020-1331-0000	SMD Resistor	330Ω±5%,1/10w,0603	PR3	1
9	3020-1022-0002	SMD Resistor	2.2Ω±5%,1/8w,0805,ROHS	R181	1
10	3020-3000-0003	SMD Resistor	4×0Ω±5%,0402,ROHS	RN8	1

11	3020-3470-0002	SMD Resistor	4×47Ω±5%, 0402, 1/16W, ROHS	RN1, RN5, RN7, RN24, RN27	5
12	3020-1104-0005	Carbon Film Resistor	100KΩ±5%, 2W, RoHS	PR1	1
13	3040-1027-0001	MLCC	2.7PF±0.25PF, 50V, 0402, RoHS	CT11	1
14	3040-1150-0001	MLCC	15PF±5%, 50V, 0402, RoHS	CT1, CT2	2
15	3040-1220-0005	MLCC	22PF±5%, 16V, 0402	CP13	1
16	3040-1330-0003	MLCC	33PF±5%, 16V, 0402	BC1, BC2	2
17	3040-1470-0001	MLCC	47PF±5%, 50V, 0402, RoHS	C162	1
18	3040-1101-0002	MLCC	100PF±5%, 50V, 0402, RoHS	BC8, BC68, BC69	3
19	3040-1151-0001	MLCC	150PF±5%, 50V, 0402, RoHS	CA2, CA8, CT15, CT16	4
20	3040-1331-0006	MLCC	330PF±5%, 50V, 0402	C17	1
21	3040-1561-0006	MLCC	560pF±10%, 50V, 0402	CT4	1
22	3040-1102-0002	MLCC	1nF±10%, 50V, 0402	CT9, CT12, CT17, C209, C210	5
23	3040-1272-0001	MLCC	2700PF±10%, 50V, 0402, RoHS	CA6, CA11	2
24	3040-1472-0003	MLCC	4.7nF±10%, 50V, 0402	CT10	1
25	3040-1103-0016	MLCC	0.01uF±10%, 50V, 0402, ROHS	BC13, BC22, CT28, CT35	4
26	3040-1104-0018	MLCC	0.1uF+80/-20% 25V 0402	CA1, CP4, BC4, CT5, BC5, CT6	71
27				BC6, CP7, C7, BC9, BC86, BC11	
28				CT13, CT14, CP14, BC15, CP16	
29				BC16, BC17, CT18, BC18, CT19	
30				C19, C21, BC23, BC24, CT25	
31				C25, BC25, CT26, C26,	
32				CT27, C27, BC27, CT30, CT31	
33				BC37, BC38, BC39, BC40, BC41	
34				BC42, BC43, BC44, BC45, BC142	
35				BC46, BC53, BC67, BC70, BC71	
36				BC72, BC73, BC74, BC75, BC76	
37				BC77, BC78, BC79, BC80, BC81	
38				BC82, BC83, BC84, BC85, C114	
39				BC51, PC5, BC10	
40				C81, C82	

41	3040-1334-0004	MLCC	0.33uF±20%,10V,0402,RoHS	CA5,CA7	2
42	3040-1474-0006	MLCC	0.47uF+80-20%,16V,0402,RoHS	CP5	1
	3040-1105-0014	MLCC	1uF+80-20%,16V,0402	CT24,CT29,BC26	3

Component List

Component List of Decoding Board					
No.	**Material No.**	**Name**	**Specification**	**Position**	**Qty**
1	3040-1273-0001	MLCC	0.027uF+80-20%,50V,0603,RoHS	PC3	1
2	3040-1104-0008	MLCC	0.1uF+80-20%,50V,0603	PC4	1
3	3040-1104-0010	MLCC	0.1uF+80-20%,50V,0805,RoHS	BC162	
4	3040-1105-0013	MLCC	1uF+80-20%,16V,0603,ROHS	BC7,BC12,C16,C18,C20,BC21	6
5	3040-1225-0003	MLCC	2.2uF±20%,16V,0805,RoHS	CA4,CA10,C8,CP1	4
6	3040-1475-0000	MLCC	4.7uF±20%,25V,0805,RoHSS	C5,BC87,BC88,CP12,C51	5
7	3040-1106-0007	MLCC	10uF+80-20%,16V,0805	C1,C70,CP2,CP15,BC161	5
8	3040-2106-0041	electrolytic capacitor	10uF±20%,400V,Φ10×17mm	EC18	1
9	3040-2106-0011	electrolytic capacitor	10uF+80-20%,50V,Φ5×11mm	EC7	1
10	3040-2107-0010	electrolytic capacitor	100uF±20%,16V,Φ5×11mm	ECT2,EC2,	2
11	3040-2476-0000	electrolytic capacitor	47UF±20%,10V,Φ5×11mm,RoHS	ECA1	1
12	3040-2227-0000	electrolytic capacitor	220UF±20%,10V,Φ6.3×5mm	EC1,C67 ,EC3	3
13	3040-2475-0028	electrolytic capacitor	4.7uF±20%,400V,Φ8×12mm,	EC17	1
14	3040-2337-0000	electrolytic capacitor	330UF±20%,10V,Φ6.3×11mm,	ECV1	1
15	3040-2108-0008	electrolytic capacitor	1000uF±20%,10 高频低阻,105°,	EC4	1
16	3040-2108-0000	electrolytic capacitor	1000UF±20%,10V,Φ8×14mm,	EC5	1
17	3040-3222-0001	high voltage capacitor	2200PF±20%,1KV	PC2	1

18	3040-1222-0007	High pressure ceramics capacitors	2200PF±20% AC400V	PC1	1
19	3170-3004-0214	Chip Bead	0402,330Ω,100mHz,100mA,ROHS	FBT1,FBT2	2
20	3170-3006-0306	Chip Bead	0603,60Ω,IDC:max800mA,	L28	1
21	3170-3006-0333	Chip Bead	0603,330Ω,100mHz,200mA,ROHS	FB10	1
22	3170-3008-0526	Chip Bead	0805,330Ω,100mHz,1.5A,ROHS	FB25,FB26,FB30	3
23	3170-3006-0330	Chip Bead	0603,1KΩ,100MHz,200mA	FB29	1
24	3170-3008-0510	Chip Bead	0805,60Ω,100MHz,max800mA	FB28,L34	2
25	3050-1301-8003	White high-frequency ceramic inductors	1.8nH±5%,0402,ROHS.	LT2	1
26	3050-1312-0001	White high-frequency ceramic inductors	12nH ± 5%,0402, nominated supplier: Along the winding,ROHS	LT1	1
27	3080-3217-5100	transverter	BW21S7511A01TF,0805,75Ω,ROH	TT1	1
28	3050-1022-0007	SMT Power Inductors	2.2UH, ±20%,1.75A,SMTDR43	L6	1
29	3050-1100-0061	SMT Power Inductors	10uH±20%,SD54-10ROMC,2.3A,	L3	1
30	3050-1150-0004	Vertical inductance	15uH±5%,3A,Φ10×12mm,	PL2	1
31	3050-1315-1007	White high-frequency ceramic inductors	150nH±5%,0603	LT3	1
32	3150-1134-1207	transverter	KB1341-22093 without12Voutput,ROHS	PT3	1
33	3060-1141-4802	Chip Diode	1N4148,LL-34 RoHS	D1	1
34	3060-1990-0000	Chip Diode	BAV99,SOT-23	ET2	1
35	3060-1104-0000	Diode	FR104 DO-41	PD9	1
36	3060-1107-0000	Diode	FR107 DO-41	PD7	1
37	3060-1140-0700	Diode	IN4007 DO-41	PD1,PD2,PD3,PD4	4
38	3060-1360-0000	Diode	SB360,DO-27,RoHS	PD8	1
39	3060-3392-0000	Light-emitting diode	Φ3,Astigmatism highlight, positive, red and green	LED5	1
40	3060-5239-0400	SMD TRANSISTOR	2N3904 SOT23	Q6,Q7,Q9,Q11,Q3	5
41	3060-5855-0001	SMD TRANSISTOR	S8550,SOT-23,ROHS	Q2	1

42	3060-5239-0600	SMD TRANSISTOR	2N3906 SOT23	Q5	1

Component List

Component List of Decoding Board					
No.	**Material No.**	**Name**	**Specification**	**Position**	**Qty**
1	3060-6034-0100	SMD TRANSISTOR	AO3401,SOT-23,ROHS	Q8,Q10	2
2	3070-1243-8000	Receiver head	HL-2438M,38KHz,ROHS	IR1	1
3	3070-1382-1001	SMD IC	M3821-ALAA,LQFP-128-Pin,ROHS	U1	1
4	3070-1312-4003	SMD IC	A3R12E40CBF-AH,32M×16,84-ball	U5	1
5	3070-1253-2003	SMD IC	GD25Q32BSIG,SOP8,32M,208MIL,	U3	1
6	3070-1240-8501	SMD IC	APS2408ES5-ADJ,SOT23-5L,ROHS	UP2	1
7	3070-1813-6100	IC	PN8136,DIP-7,ROHS	U13	1
8	3070-1817-0001	optocoupler	BPC-817B DIP4	U14	1
9	3070-3431-0000	Stabilivolt IC	TL431 TO-92	U15	1
10	3070-1608-0000	SMD IC	MxL608,QFN-25	UT1	1
11	3070-1890-5000	SMD IC	SGM8905,MSOP-10	UA1	1
12	3070-311-17108	SMD IC	LD1117DT18,SOT-223,RoHS	U16	1
13	3070-1297-2000	SMD IC	AP2972 SOP8，ROHS	U8	1
14	3160-9383-1101	Concentric Socket	AV3-8.3-11, Yellow, white and red, without earth tag	JK2	1
15	3162-0011-0000	HDMI Socket	10428-01944	J2	1
16	3160-5000-0000	USB Socket	ZX-USBSOCKET-A	J1	1
17	3120-1102-0007	fuse	Slow Type, 1A,250V	F2	1
18	3110-2270-0600	oscillator	27MHz,30PPM, fundamental wave 49S	Y1	1
19	3110-2160-0600	Crystal	16MHz, fundamental wave 49S,20PPM,RoHS	YT1	1
20	3200-3010-0000	**Varnished Tube**	Φ1.0		
21		**Varnished Tube**	Φ1.0×5.5mm×2	LED5	11
22					(mm)
23					
24	3050-3683-0002	Choking coil	68mH±10%,0.15A,UU9.8,RoHS.	PL1	1

25					
26					
27					
28					
29					
30					
31					
32					
33					
34					
35					
36					
37					
38					
39					
40					
41					
42					