DVB-Terrestrial Receiver

SMP124 HDT2(DDR2 512M)

Service Manual

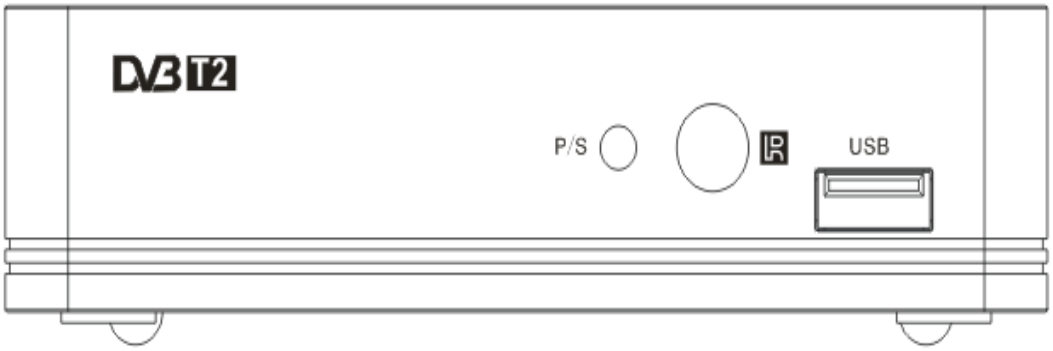

This service manual should be used with the User Manual together.
Please read this Service Manual and User Manual carefully before service this product.

Contents

Safety Instructions

Generally Guide

1. Please check electric circuits before maintenance and change the damaged or over heated components if short-circuit has been found.
2. Please check all protective devices have been installed well after maintenance, such as insulation covering and paper.
3. Please finish following electrical leakage tests after maintenance to avoid electric shock.

Low Voltage Leakage Testing

Take out power cord from an AC outlet and connect a length of wire between the two leads of the plug.

Use Gear R x 10K of the voltmeter to measure the resistance between shorted-out AC plug and exposed metallic parts like screw cap, control shaft etc. which shall be infinite.

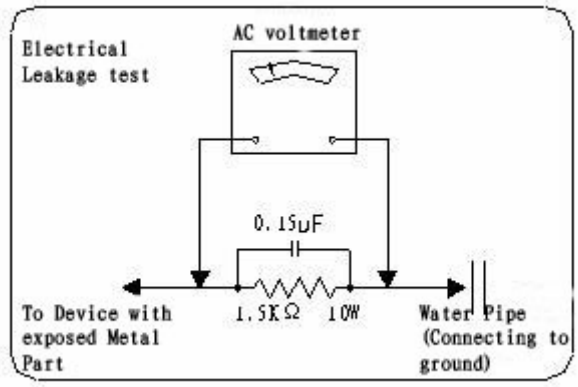

Picture 1

High Voltage Leakage Testing

As shown in Picture 1, connect a resistor of 1.5K, 10W and capacitor of 0.15 uF between exposed metallic part and well grounded devices (water pipe etc.).

Plug power cord directly into the socket. Do not use insulated transformer to test.

Use 1000 Ohm/V or more sensitive voltmeter to measure AC voltage of the resistor.

Turn over the AC jack and plug into the socket again to iterate the inspection as above.

Inspect the voltage of the resistor between other exposed metallic parts and the earth in the same way.

Any parts' voltage of the resistor should not over 0.75Vrms. A leakage testing machine with voltage over 2,500 V can also be used for this inspection in which case the electric leakage should not be over 0.5mA. When the leakage exceeds that limit, electric shock may occur. Please check and repair again before hand it over to users.

4. Protect Electrostatic-Sensitive Devices from Electrostatic Discharge

Some solid states made of semiconductors materials can be easily damaged by commonly static charges, those components are usually called electrostatic-sensitive devices. Such like integrated circuits, laser diodes and field effect devices. The following tips will help you to reduce the impacts on those components while electrostatic discharging.

Please release static which build-up on human body before handling electrostatic-sensitive devices by using grounded tools. The antistatic strap which can be found in the market will be a good choice.

Please install the electrostatic-sensitive devices on conductor products such as aluminum foil to prevent static build-up after disassembling from this DVB-T receiver.

The soldering iron must be earthed while soldering and unsoldering the electrostatic-sensitive devices.

Only antistatic solder can be used for electrostatic-sensitive devices disassembly. The electrostatic-sensitive devices will be damaged by static without ESD prevention solder while disassembling.

Do not use Freon Volatile which may damage the electrostatic-sensitive devices by discharging static.

Do not take the new electrostatic-sensitive devices from the antistatic protection package unless you are ready for installation. (Most electrostatic-sensitive devices will be packed with anti-static foam, foil or similar conductive materials. And a lead wire to prevent short circuit.)

Please contact the core or circuit parts of the device to be installed with ESD protection package before carry out the new electrostatic-sensitive devices from it. And make sure no power supply on the device and remember other precautions.

Try to reduce body movements while assembling or disassembling electrostatic-sensitive devices. (Clothes made of fabrics will build-up static by attrition. Feet lifts up from floor will also build-up static.)

Electrical Specifications

A Audio Section （MPEG-1 Layer Ⅱ, R. L Track Output）				
No.	ITEM	UNIT	REQUIREMENTS	Test Environment
1	Audio Output Level	V	1.0～2.0	Output impedance is 10KΩ 1KHz 0dB
2	Frequency Characteristics	dB	+1/-2.0	20Hz-60Hz
			±0.5	60Hz-17.5KHz
			+1/-3	17.5KHz-20KHz
3	S/N	dB	⩾70	1KHz 0dB weighting
4	L/R Channel Separation	dB	⩾60	N-CBAR100.TS f= 1KHz P-CBAR75.TS
5	L/R Channel Level Difference	dB	⩽0.5	60Hz-18KHz
6	Audio THD	%	⩽1	60Hz-18KHz
7	Digital Coaxial Output Level	Vp-p	0.5±20%	75Ω Load

B Video (MPEG-2MP@ML)					
1	Output range	Video	Vp-p	1.0±15%	75Ω Load
		Brightness/RGB		0.7±10%	
		Sync		0.30±8%	
2	Frequency Characteristics (75Ω)		dB	±0.5	0.5-4.8MHz
			dB	⩽+0.5/-1.0	4.8-5.0MHz
			dB	⩽+0.5/-4	5.0-5.5MHz
3	Brightness S/N		dB	≥56	WTD 5MHz
4	Chromatic S/N		dB	AM≥58	Load 75Ω
				PM≥51	
5	Differential gain（DG）		%	⩽±5	Load 75Ω
6	Differential phase（DP）		°	⩽±5	Load 75Ω
7	Brightness non-linear distortion		%	⩽5	Load 75Ω
8	△τ chrominance-luminance delay inequality		ns	⩽±30	Load 75Ω
9	△K Chrominance-luminance Gain Inequality		%	⩽±5	Load 75Ω
10	Brightness Waveform Distortion		%	⩽3	Load 75Ω
11	Chrominance Subcarrier Offset is not more than		Hz	200	Load 75Ω

C Demodulation			
1	Input Frequency Range	MHz	174~230MHz,470～862MHz (VHF/UHF)
2	Input Level Range	dBm	-75～-20
3	Frequency Offset	MHz	-0.4MHz~+0.74MHz

D Power Supply (~165-264V)				
1	+5V	mA	2000	5%
2	+5V Active Antenna Amplifier	mA	30	

E Others				
1	Free Fall	Meets QJ/ET08.02-2005's requirements		
2	Remote Control Distance	M	⩾8	In line
			⩾6	With range of ±30°
3	Rated Power Consumption	W	8	

Mechanical Exploded View Drawing

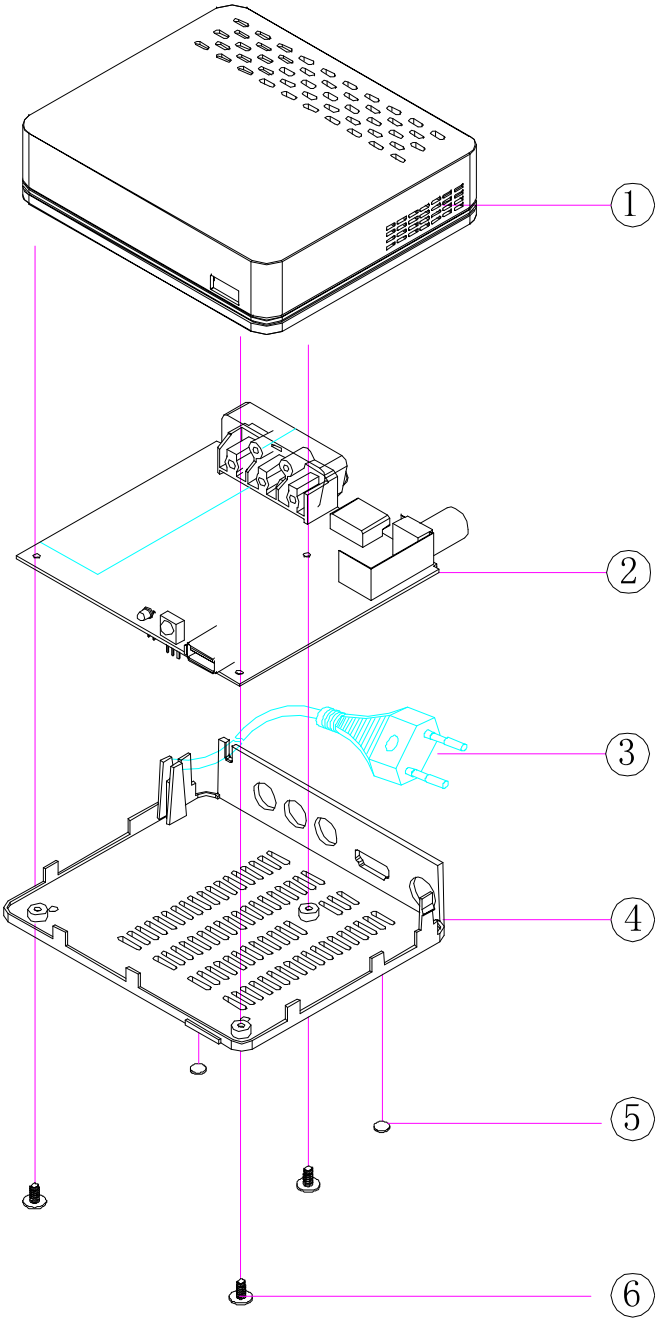

Mechanical Parts List

NO.	Part No.	Part Name	Qty	Notes
1	4110-1704-000H	Top Cover	1	Transparent ABS
2	2104-1710-300H	Decoding Board	1	ST2.855.0644MX
3	4111-1704-003H	Bottom Cover	1	Transparent ABS
4	3141-5132-0363	Power Cord	1	1250mm, VDE
5	3000-4000-0800	Feet Pad	2	Rubber, Black
6	3211-2008-0005	ST2X8PANi Screw	3	ST2 X 8PANi

Packaging and Accessories

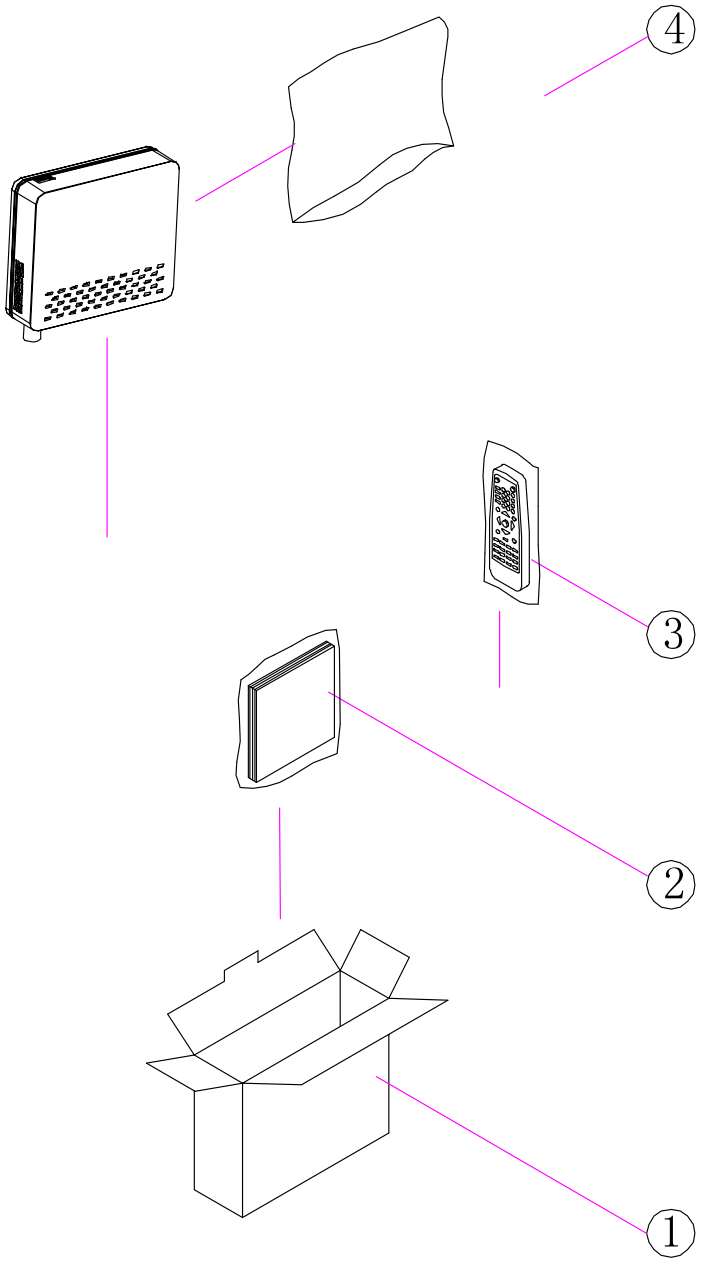

Packaging Exploded View Drawing

Material List

NO.	Material No.	Name	Qty
1	4401-1704-000H	White Box	1
2	ST2.025.0525SS	User Manual	1
3	2301-1555-000H	Remote Control	1
4	4413-1812-1100	Bubble Bag 180*210mm	1

Appendix 1 Flowchart and Circuit Diagram

Flowchart

Wiring Diagram

Circuit Diagram of Decoding Board

Circuit Diagram of Control Board

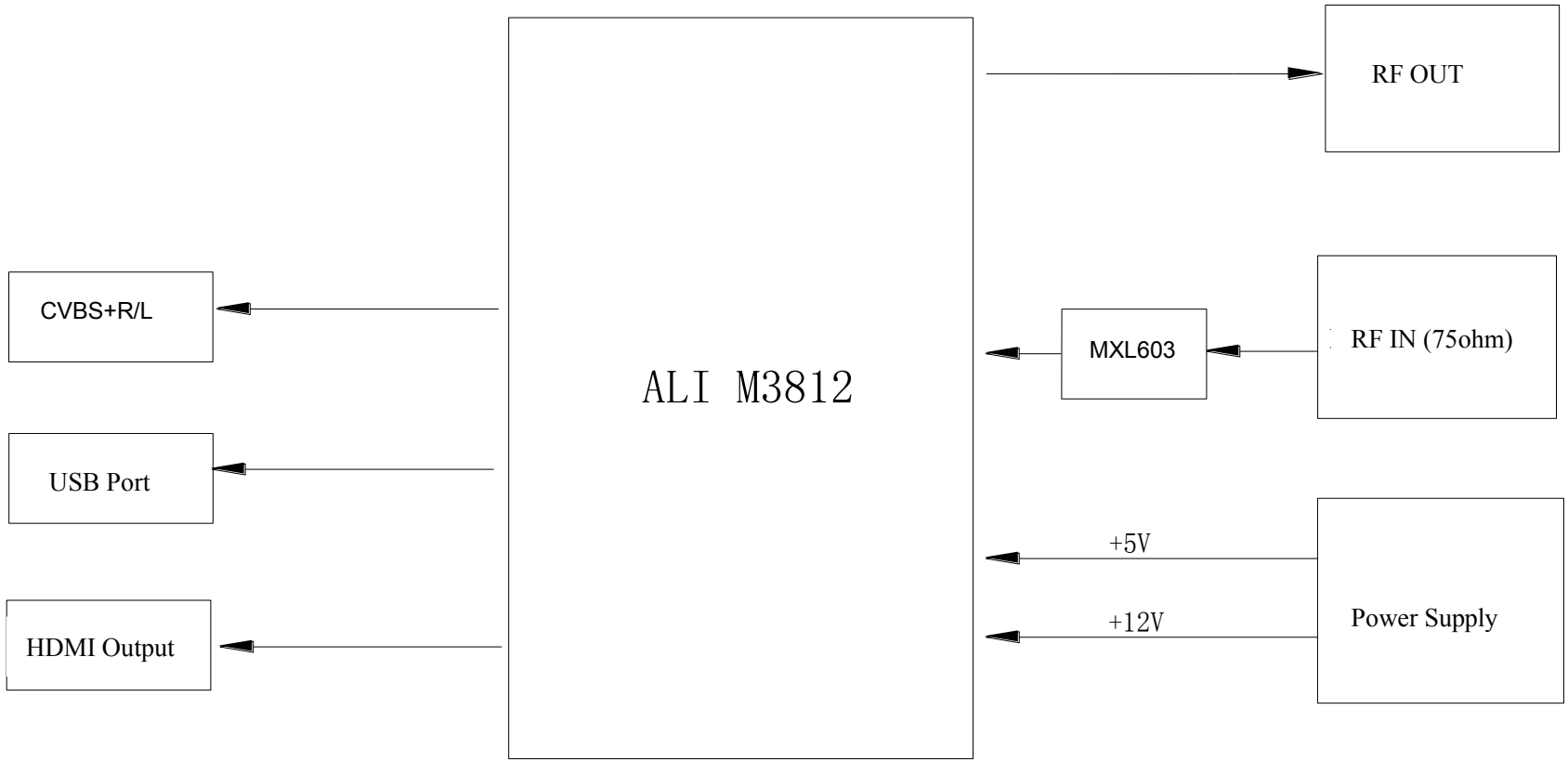
RF OUT
CVBS+R/L
ALI M3812
MXL603
RF IN (75ohm)
USB Port
+5V
+12V
Power Supply
HDMI Output

Flowchart

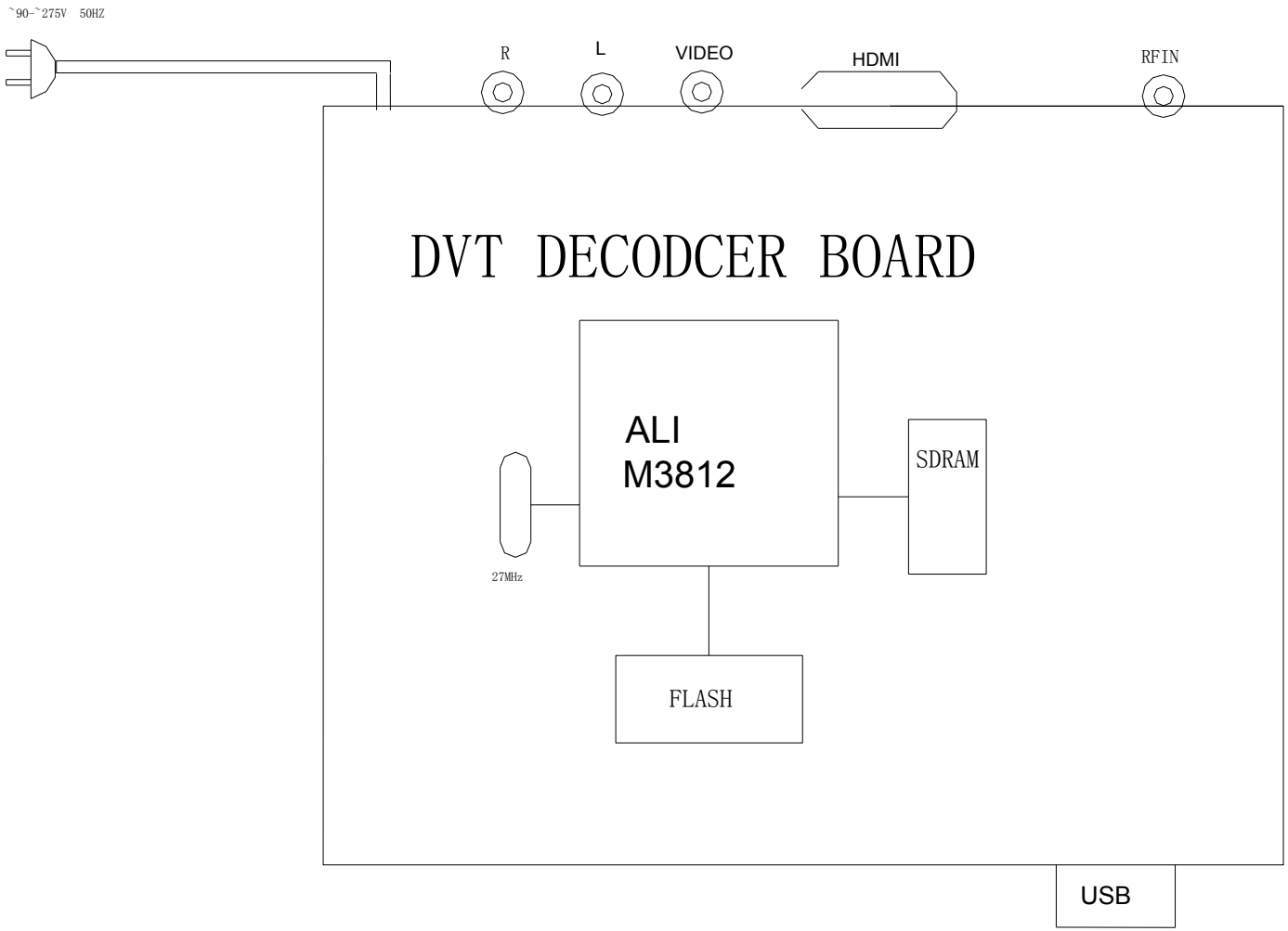

Wiring Diagram

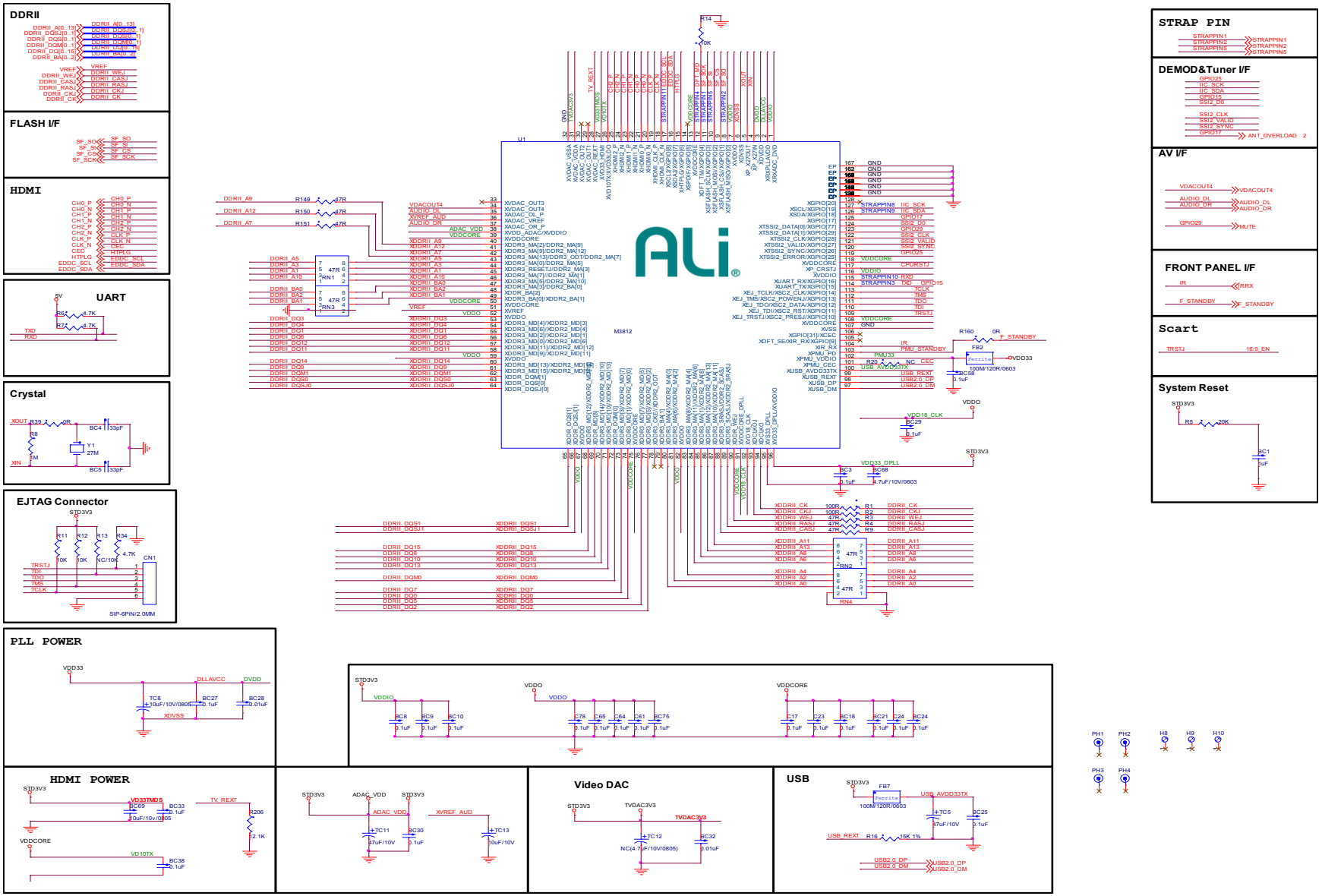

Decoding Board Schematic Diagram (1)

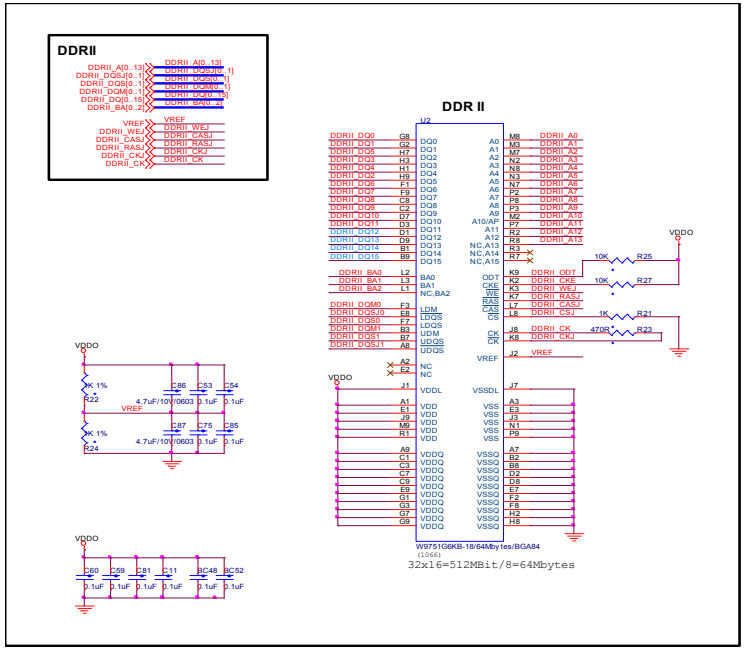

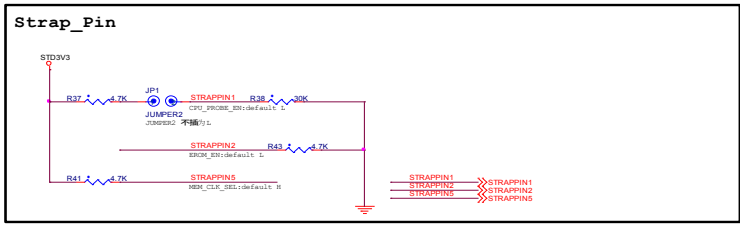

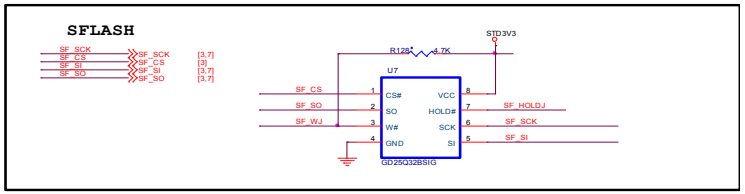

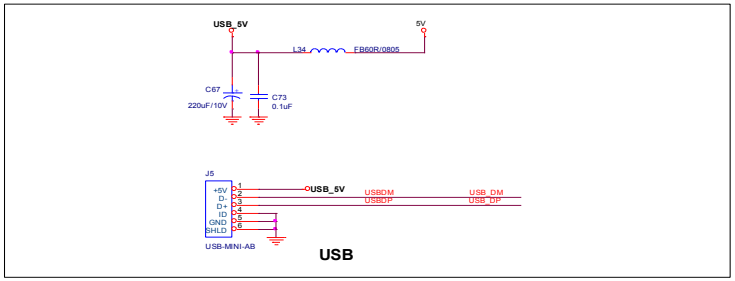

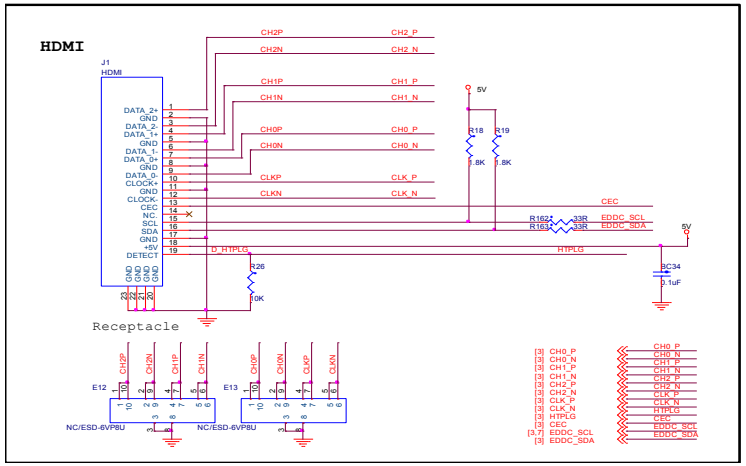

Decoding Board Schematic Diagram (2)

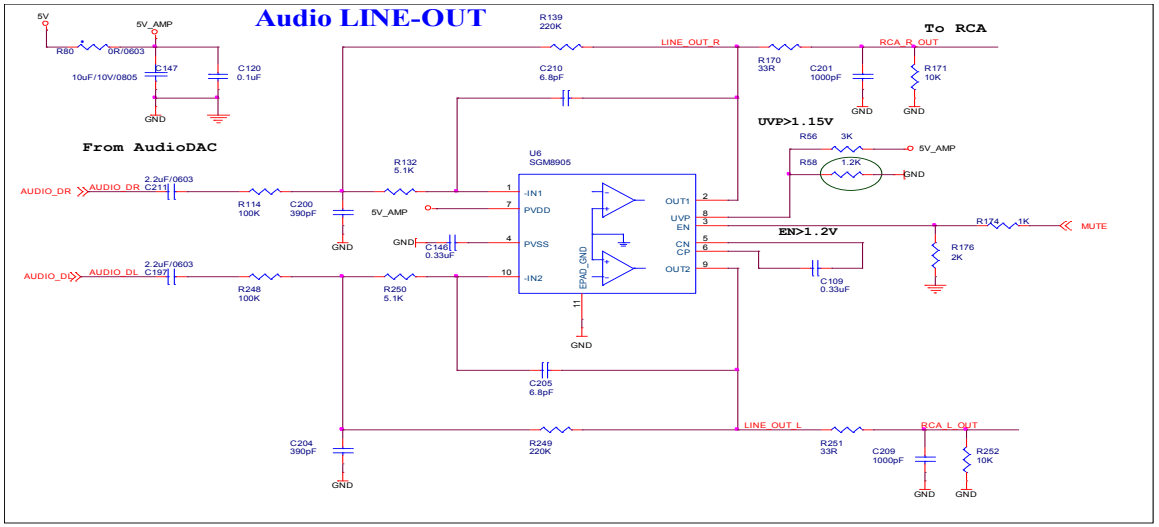

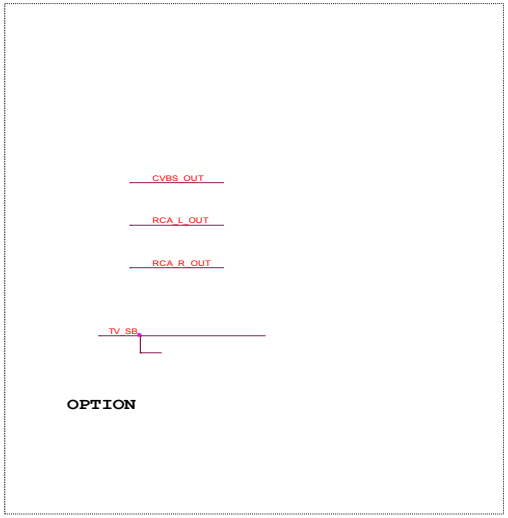

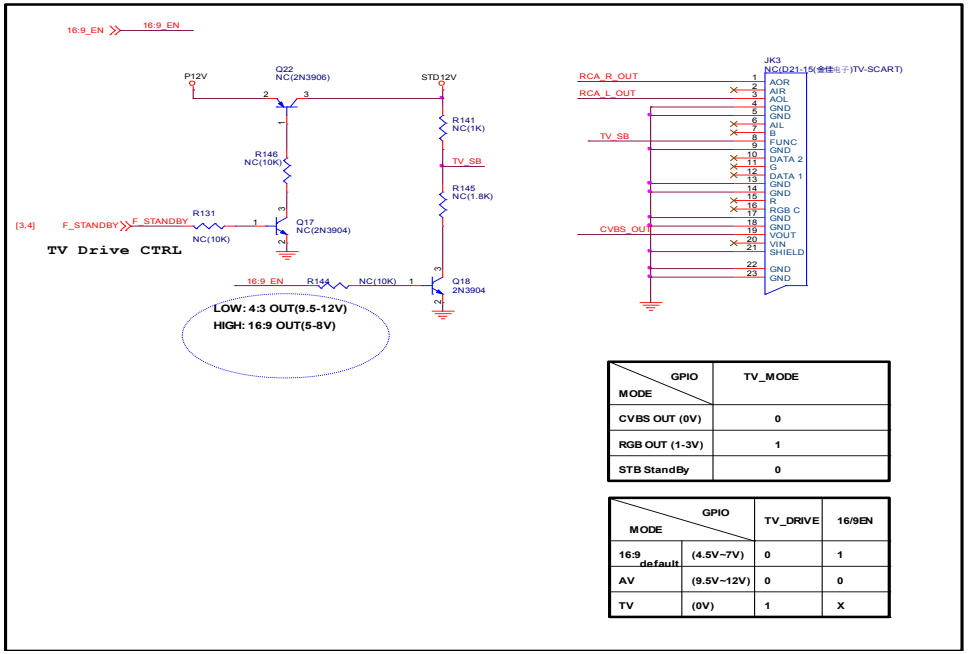

MODE \ GPIO	TV_MODE
CVBS OUT (0V)	0
RGB OUT (1-3V)	1
STB StandBy	0

MODE \ GPIO		TV_DRIVE	16/9EN
16:9 default	(4.5V~7V)	0	1
AV	(9.5V~12V)	0	0
TV	(0V)	1	X

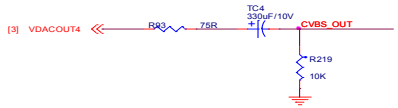

Decoding Board Schematic Diagram (3)

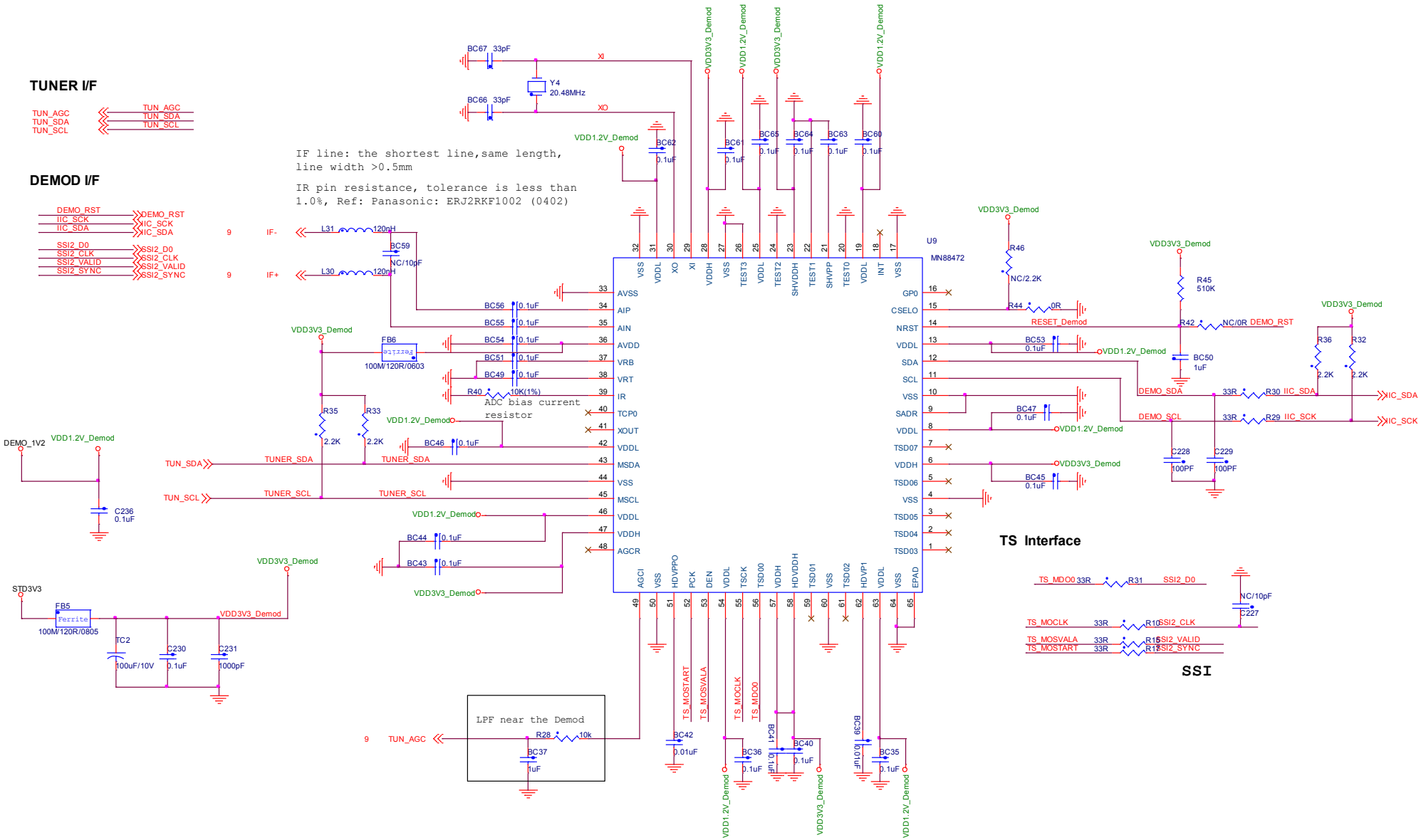

Decoding Board Schematic Diagram (4)

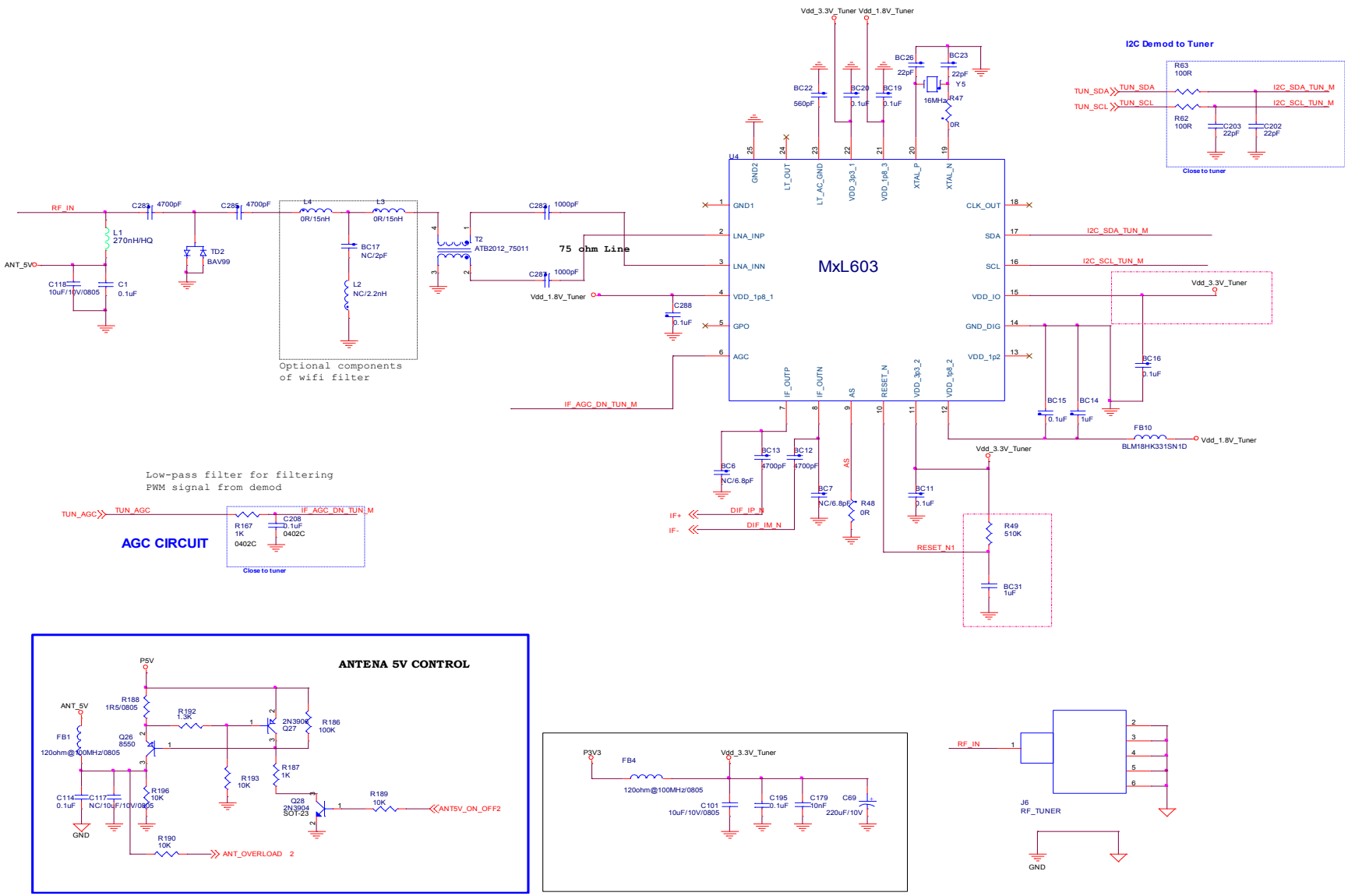

Decoding Board Schematic Diagram (5)

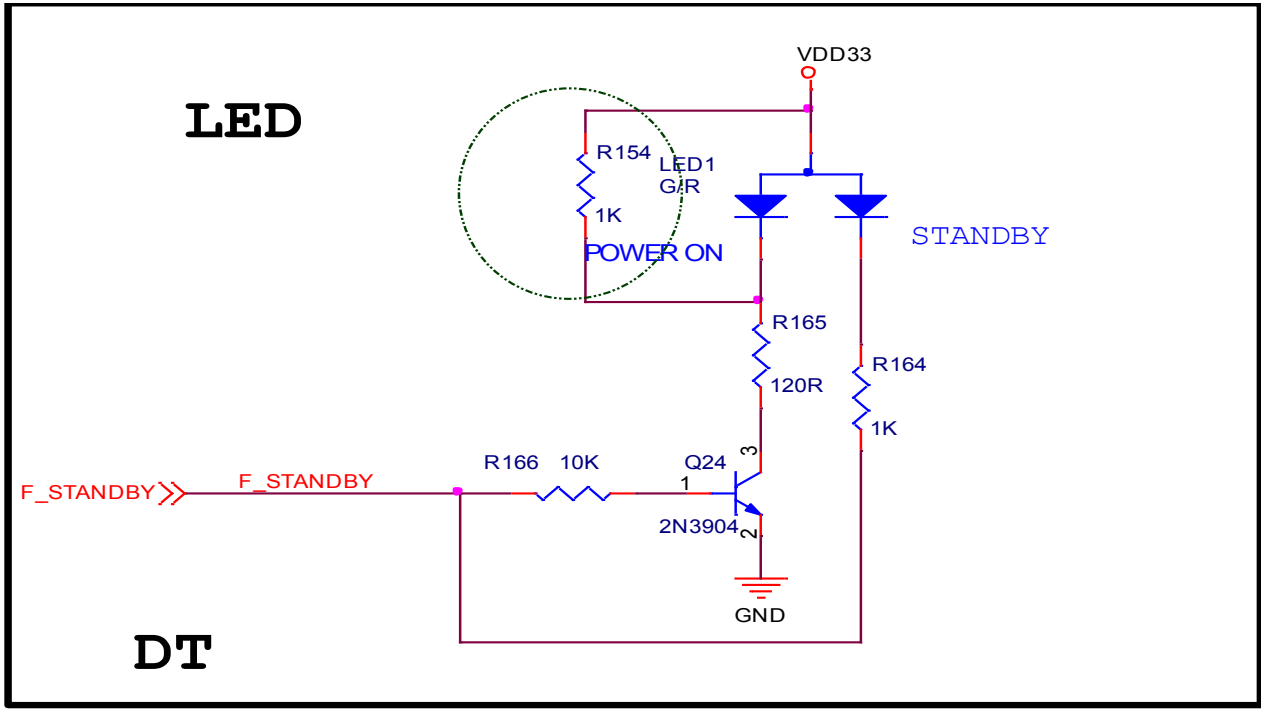

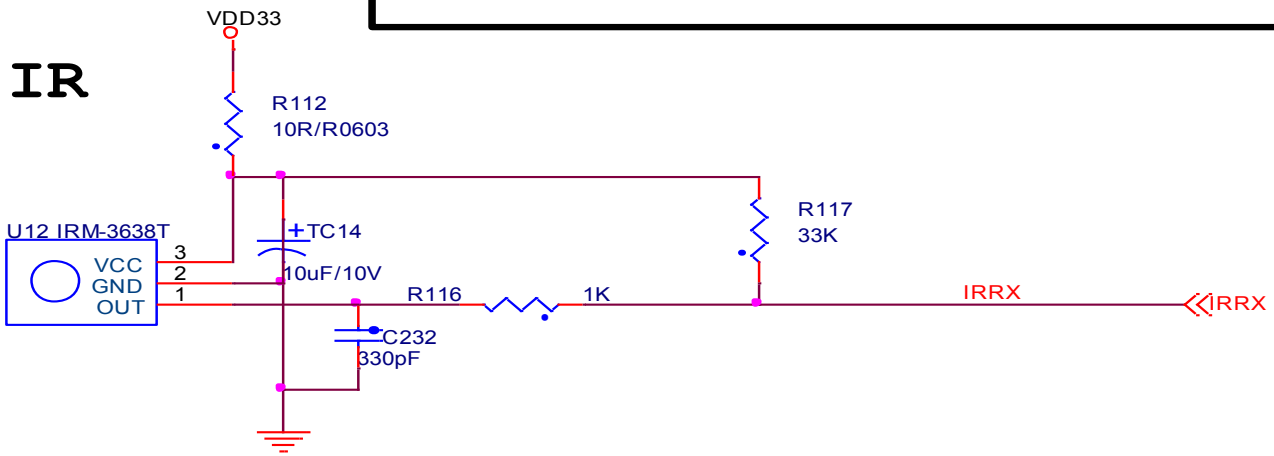

Decoding Board Schematic Diagram (6)

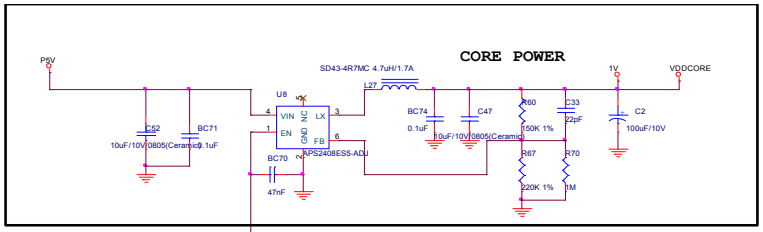

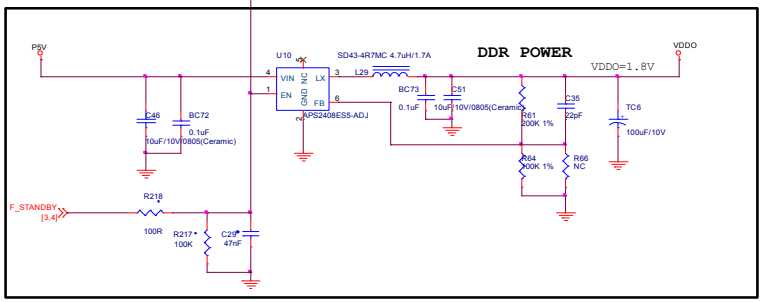

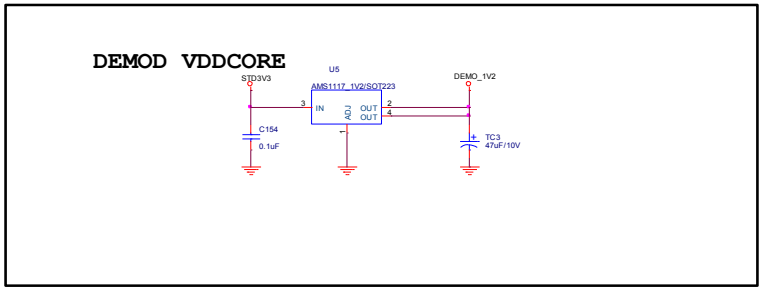

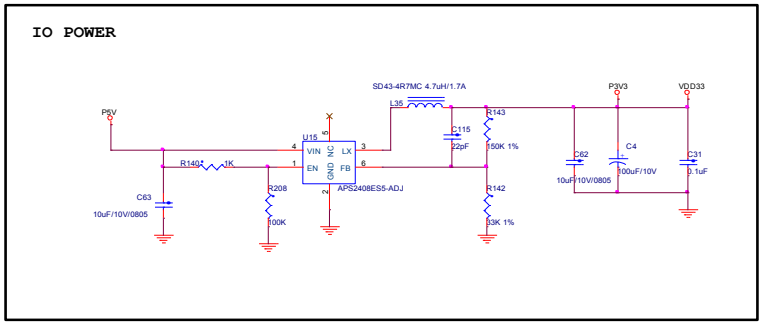

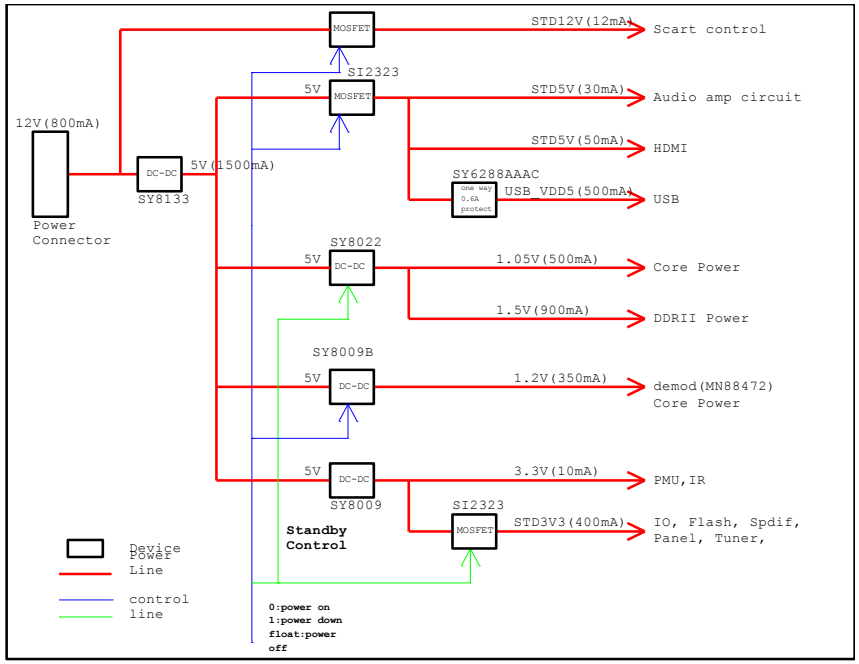

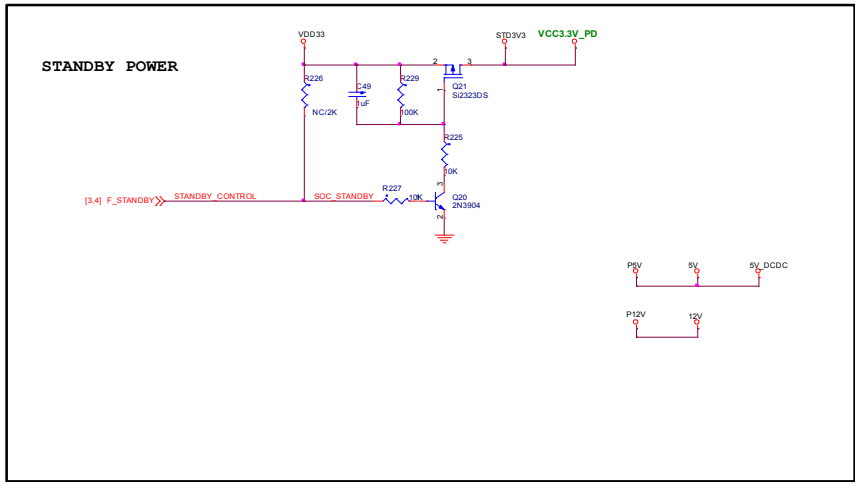

Decoding Board Schematic Diagram (7)

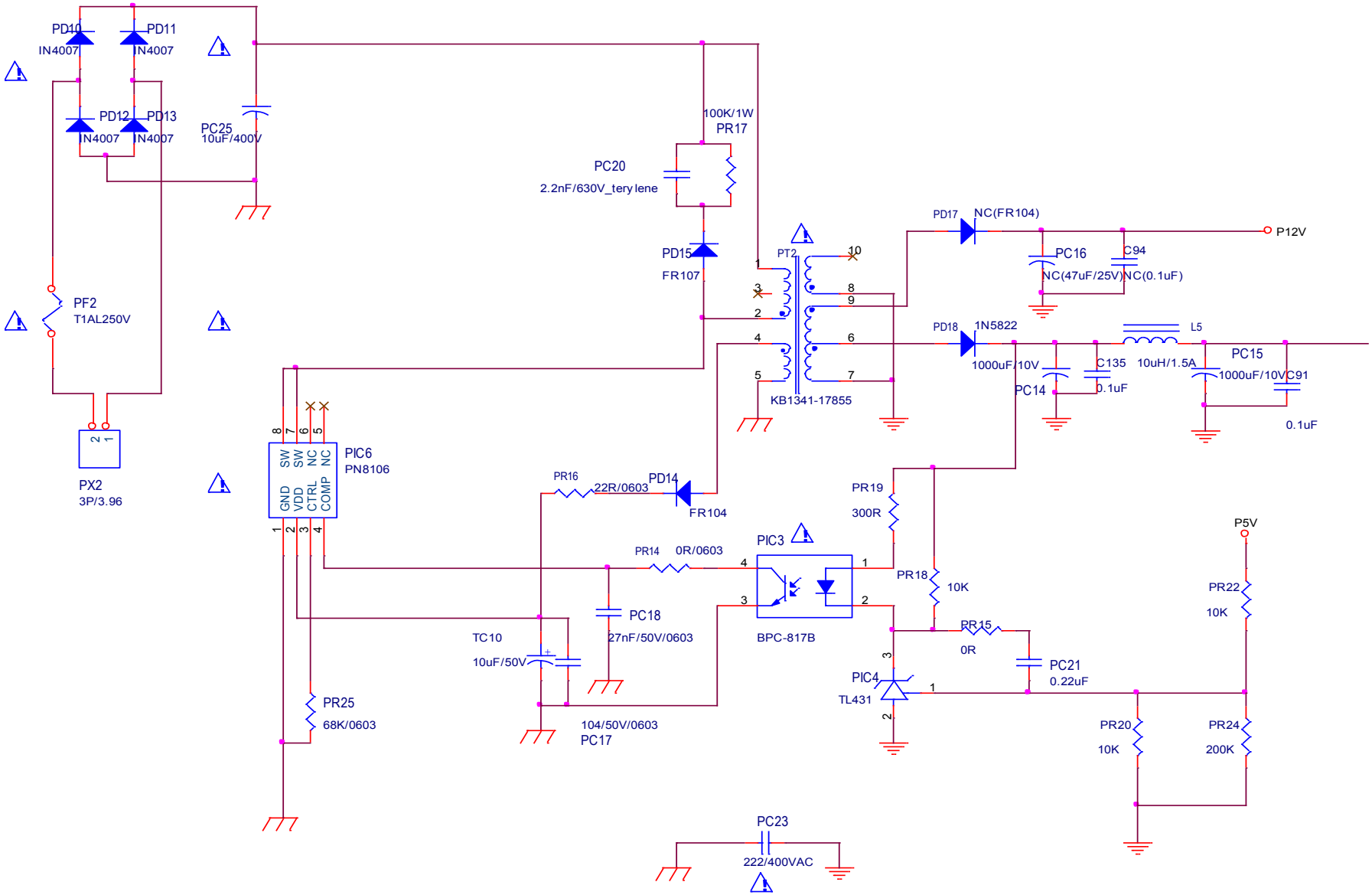

Decoding Board Schematic Diagram (8)

Appendix 2 Silkscreen of PCB

Silkscreen of Decoding Board Top

PCB Diagram of Decoding Board Top

Silkscreen of Decoding Board Bottom

PCB Diagram of Control Board Bottom

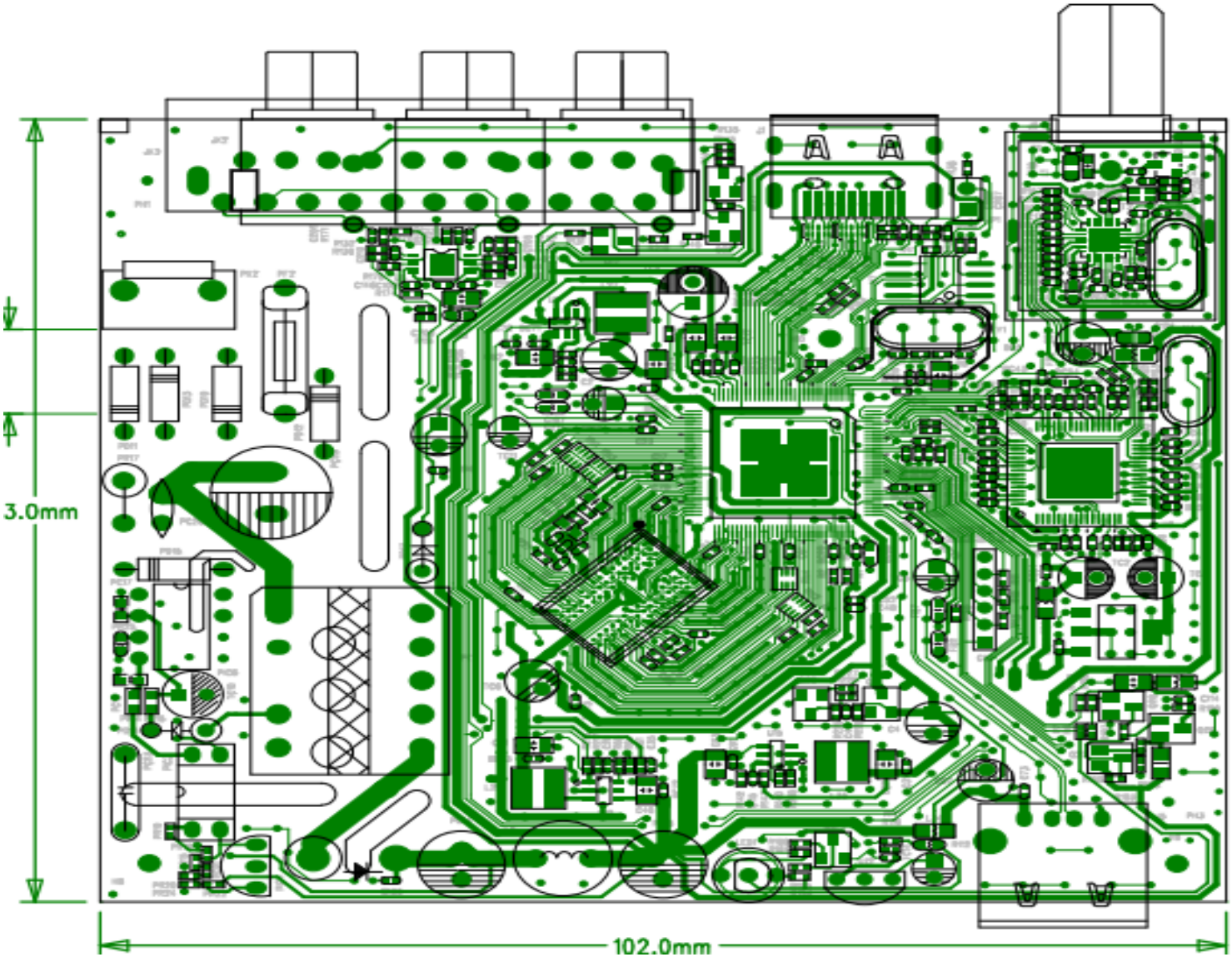

Silkscreen of Decoding Board Top

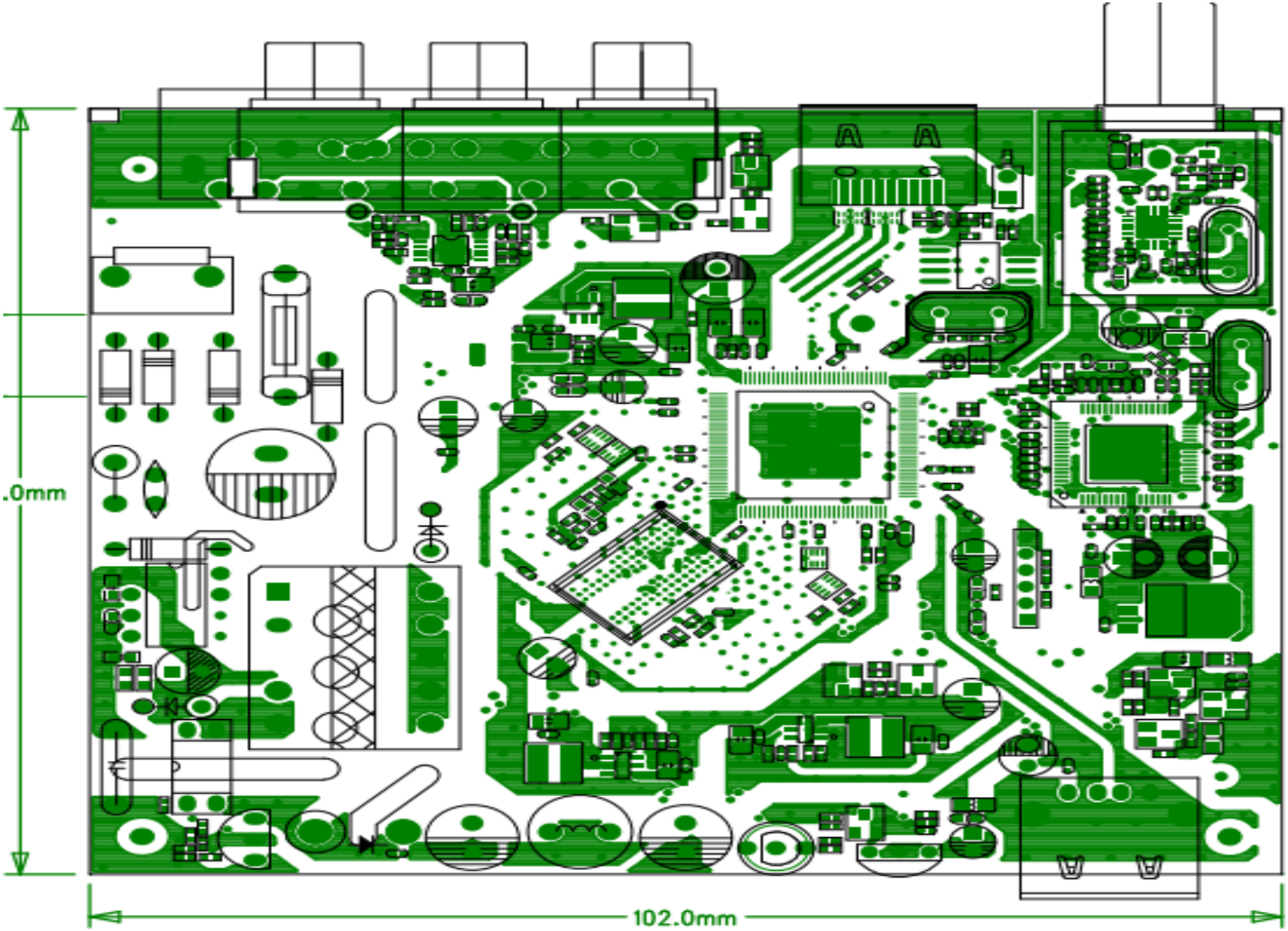

PCB Diagram of Decoding Board Top

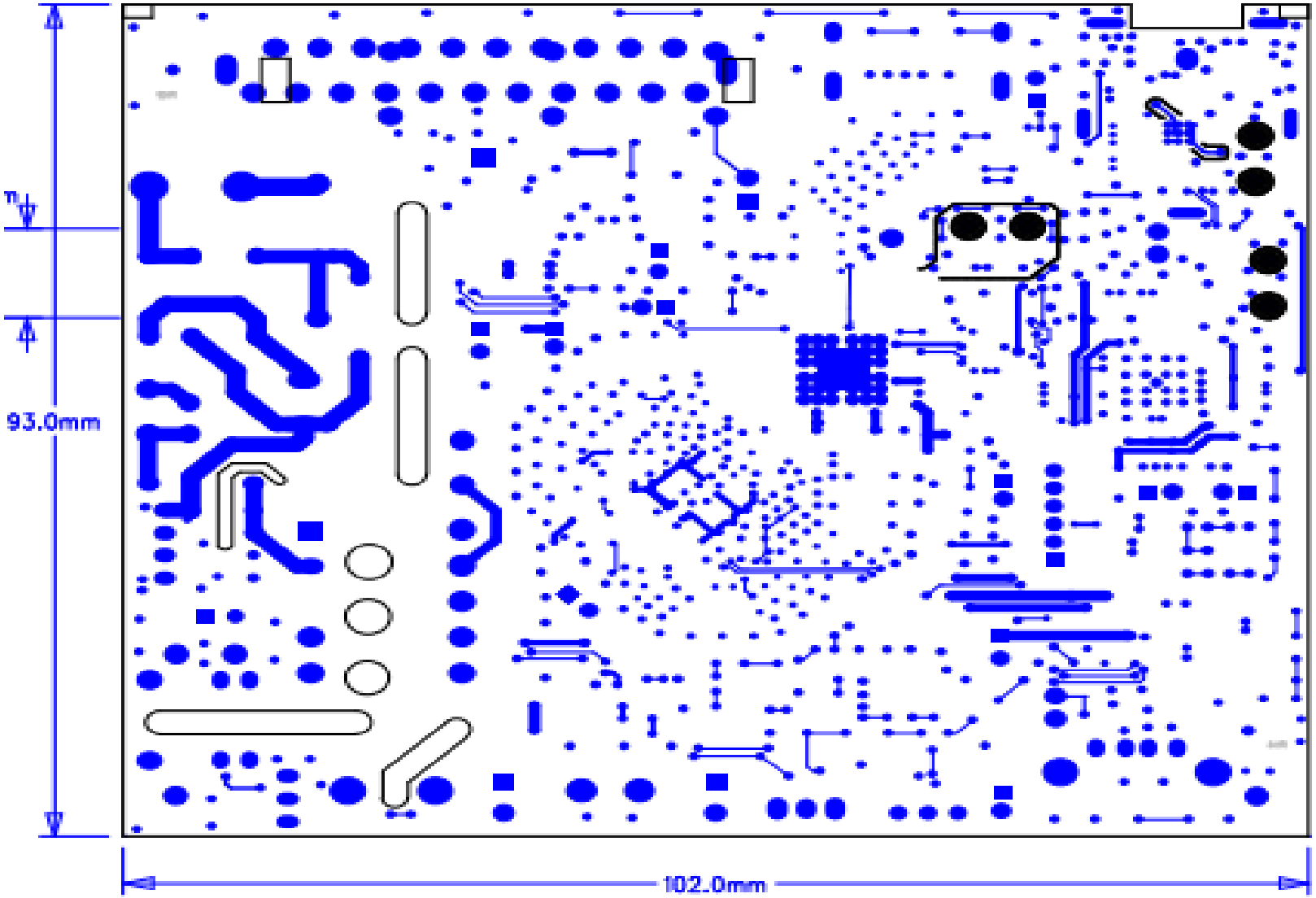

Silkscreen of Decoding Board Bottom

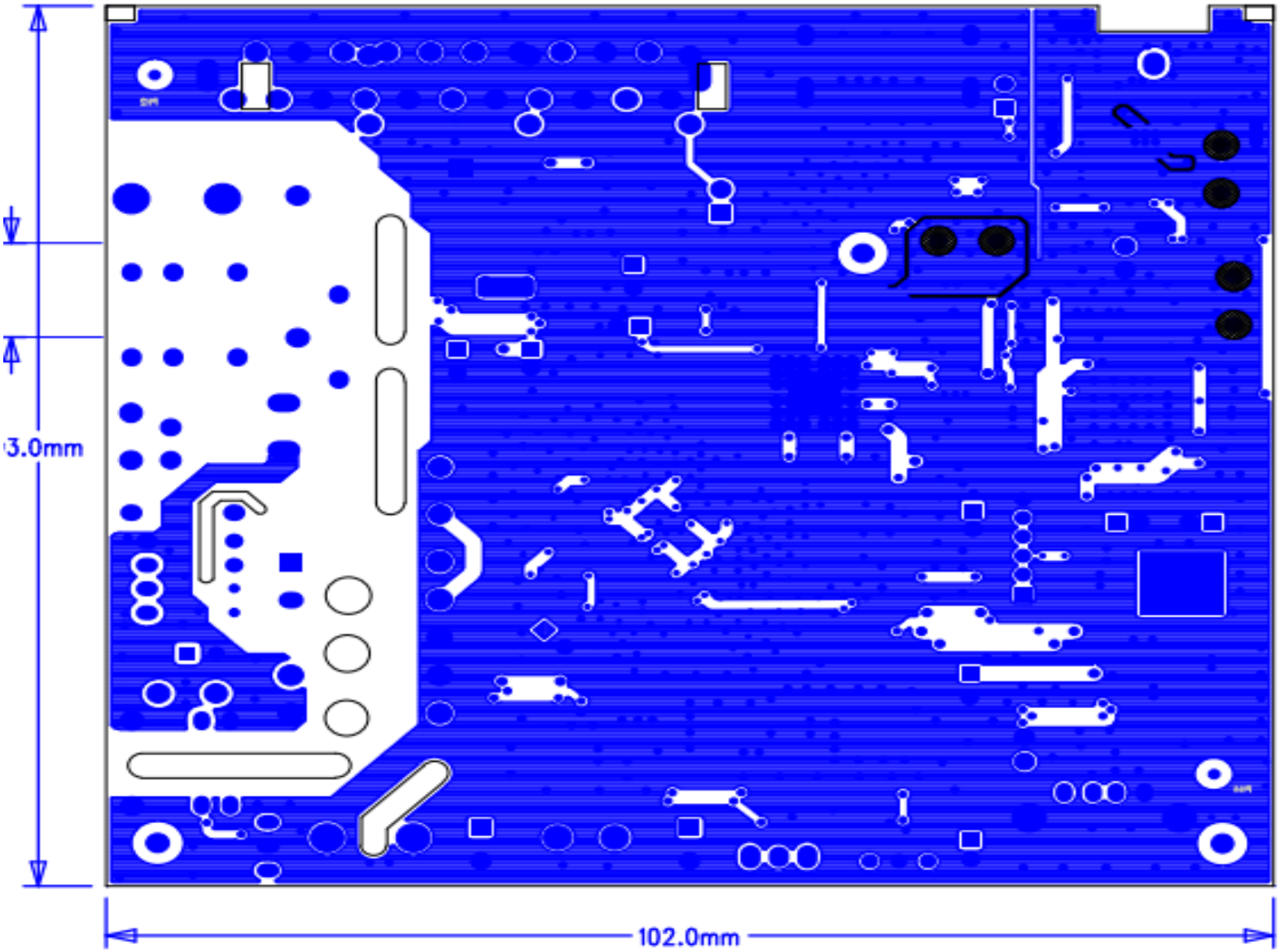

PCB Diagram of Decoding Board Bottom

Appendix 3 Component List

Component List of Decoding Board

Component List

Component List of Decoding Board (1)					
NO	**Material No.**	**Name**	**Specification**	**Position**	**Qty**
1	4208-1710-000H	Decoding Board	ST7.820.1388,102×93×1.2mm,		1
2			94V0 double-sided fiber board, ROHS		
3	3260-1000-1400	Heat Sink	ST7.061.0069,14.3×14×6mm	Upside of U1	1
4			Aluminium		
5	3020-1000-0004	SMD Resistor	0Ω±5%,1/16w,0402	L3,L4,PR15,R39,R44,R47,	9
6				R48,R160,R135	
7	3020-1330-0007	SMD Resistor	33Ω±5%,1/16w,0402	R10,R15,R17,R29,R30,	10
8				R31,R162,R163, R170,R251	
9	3020-1470-0002	SMD Resistor	47Ω±5% 1/16W 0402	R3,R4,R9,R149,R150,R151	6
10	3020-1750-0007	SMD Resistor	75Ω±5%,1/16w,0402	R93	1
11	3020-1101-0011	SMD Resistor	100Ω±5%,1/16w,0402	R1,R2,R62,R63 ,R218	5
12	3020-1301-0004	SMD Resistor	300Ω±5%,1/16w,0402	PR19	1
13	3020-1121-0005	SMD Resistor	120Ω±5%,1/16w,0402	R165	1
14	3020-1471-0003	SMD Resistor	470Ω±5%,1/16w,0402	R23	1
15	3020-1102-0005	SMD Resistor	1K±5%,1/16W,0402	R21,R116,R140,R154, R164,	8
16				R167,R174,R187	
17	3020-1122-0003	SMD Resistor	1.2K±5%,1/16w,0402	R58	1
18	3020-1132-0002	SMD Resistor	1.3K±5%,1/16w,0402	R192	1
19	3020-1182-0003	SMD Resistor	1.8KΩ±5%,1/16w,0402,RoHS	R18,R19	2
20	3020-1202-0005	SMD Resistor	2K±5%,1/16w,0402	R176	1
21	3020-1222-0004	SMD Resistor	2.2KΩ±5%,1/16W,0402,RoHS	R32,R33,R35,R36	4
22	3020-1302-0002	SMD Resistor	3KΩ±5%,1/16w,0402,	R56	1
23	3020-1472-0003	SMD Resistor	4.7K±5%,1/16w,0402	R7,R34,R37,R41,R43,R128,R130	7
24	3020-1512-0003	SMD Resistor	5.1K±5%,1/16w,0402	R132,R250	2
25	3020-6100-0300	SMD Resistor	10KΩ±1%,1/16w,0402,	R40	1
26	3020-1103-0005	SMD Resistor	10K±5%,1/16w,0402	R11,R12,R14,PR18,PR20,PR22,	20
27				R25,R26,R27,R28,R171,R189,	
28				R190,R193,R196,R219,R225,	
29				R227,R252,R166	
30	3020-6121-0301	SMD Resistor	12.1KΩ±1% 1/16w,0402,RoHS	R206	1
31	3020-6200-0400	SMD Resistor	200KΩ±1% 1/16w,0402	R61	1
32	3020-1203-0003	SMD Resistor	20KΩ±5%,1/16w,0402,RoHS	R5	1
33	3020-1153-0003	SMD Resistor	15KΩ±1% 1/16W 0402	R16	1
34	3020-1303-0003	SMD Resistor	30KΩ±5%,1/16w,0402,RoHS	R38	1
35	3020-1333-0006	SMD Resistor	33KΩ±1% 1/16W 0402	R142,R117	2
36	3020-1104-0006	SMD Resistor	100K±5%,1/16w,0402	R114,R186,R208,R217,R229,R248	6
37	3020-6100-0400	SMD Resistor	100KΩ±1%,1/16W,0402,ROHS	R64	1
38	3020-6150-0400	SMD Resistor	150KΩ±1%,1/16W,0402,ROHS	R60,R143	2
39	3020-1204-0001	SMD Resistor	200K±5%,1/16w,0402	PR24	1
40	3020-6220-0400	SMD Resistor	220KΩ±1%,1/16W,0402,ROHS	R139,R249,R67	3
41	3020-1514-0000	SMD Resistor	510K±5%,1/16w,0402	R45,R49	2
42	3020-1105-0007	SMD Resistor	1M±5%,1/16w,0402	R8,R70	2

Component List

Component List of Decoding Board (2)					
NO.	**Material No.**	**Name**	**Specification**	**Position**	**Qty**
43	3020-6100-0200	SMD Resistor	1KΩ±1%,1/10w,0402	R22,R24	2
44	3020-1331-0000	SMD Resistor	300Ω±5%,1/10w,0603	PR25	1
45	3020-6015-0000	SMD Resistor	1.5Ω±1%,1/8w,0805,	R188	1
46	3020-1000-0001	SMD Resistor	0Ω±5%,1/8w,0603	PR14,R80	2
47	3020-1100-0005	SMD Resistor	10Ω±5%,1/10w,0603	R112	1
48	3020-1220-0001	SMD Resistor	22Ω±5%,1/10w,0603	PR16	1
49	3020-3470-0002	SMD Resistors	4×47Ω±5%,1/16W,0402	RN1,RN2,RN3,RN4	4
50	3020-1104-0005	Metal Film Resistor	100K±5%, 2W	PR17	1
51	3040-1068-0000	SMD Capacitor	6.8pF±0.25PF 50V 0402	C205,C210	2
52	3040-1220-0005	SMD Capacitor	22PF±5%,16V,0402	BC23,BC26,C33,C35,C115,	7
53				C202,C203	
54	3040-1330-0003	SMD Capacitor	33PF±5%,16V,0402	BC4,BC5,BC66,BC67	4
55	3040-1101-0002	SMD Capacitor	100PF±5%,50V,0402,	BC2,C228,C229	3
56	3040-1331-0006	SMD Capacitor	330PF±5%,50V,0402	C232	1
57	3040-1391-0005	SMD Capacitor	390PF±5%,50V,0402	C200,C204	2
58	3040-1561-0006	SMD Capacitor	560pF±10%,50V,0402	BC22	1
59	3040-1102-0002	SMD Capacitor	1nF±10%,50V,0402	C201,C209,C231,C282,C287	5
60	3040-1472-0003	SMD Capacitor	4.7nF±10%,50V,0402	BC12,BC13,C283,C285	4
61	3040-1103-0013	SMD Capacitor	0.01uF±10%,25V,0402,	BC28,BC32,BC39,BC42,C179	5
62	3040-1104-0018	SMD Capacitor	0.1uF+80/-20 25V 0402	C1,C11,C17,C23,C24,C31,C53,C54	77
63				C59,C60,C61,C64,C65,C73,C75,C78,	
64				C81,C85,C91,C114,C120,C135,C154	
65				C195,C208,BC3,BC8,BC9,BC10,BC11	
66				BC15,BC16,BC18,BC19,BC20,BC21	
67				BC24,BC25,BC27,BC29,BC30,BC33	
68				BC34,BC35,BC36,BC38,BC40,BC41	
69				BC43,BC44,BC45,BC46,BC47,BC48	
70				BC49,BC51,BC52,BC53,BC54,BC55,	
71				BC56,BC57,BC58,BC60,BC61,BC62,	
72				BC63,BC64,BC65,BC71,BC72,BC73	
73				BC74,BC75,C230,C236,C288	
74	3040-1105-0014	SMD Capacitor	1uF+80-20%,16V,0402	BC1,BC14,BC31,BC37,C49,BC50	6
75	3040-1334-0004	SMD Capacitor	0.33uF±20%,10V,0402,RoHS	C109,C146	2
76	3040-1473-0004	SMD Capacitor	0.047uF±10%,16V,0402,RoHS	C29,BC70	2
77	3040-1273-0001	SMD Capacitor	0.027uF+80-20%,50V,0603	PC18	1
78	3040-1104-0008	SMD Capacitor	0.1uF+80-20%,50V,0603	PC17	1
79	3040-1224-0013	SMD Capacitor	0.22uF+80-20%,50V,0402	PC21	1
80	3040-1225-0001	SMD Capacitor	2.2uF±20% 16V 0603	C197,C211	2
81	3040-1106-0007	SMD Capacitor	10uF+80-20%,16V,0805	C46,C47,C51,C52,C62,C63,C101,	11
				C118,C147,BC69,TC8	
	3040-1475-0010	SMD Capacitor	4.7uF+80-20%,16V,0603,RoHS	BC68,C86,C87	3

Component List

Component List of Decoding Board (3)					
NO	Material No.	Name	Specification	Position	Qty
82	3040-2106-0011	Electrolytic Capacitor	10uF+80-20%,50V,Φ5×11mm	TC10	1
83	3040-2106-0010	Electrolytic Capacitor	10uF+80-20%,16V,Φ5×11mm	TC13,TC14	2
84	3040-2476-0002	Electrolytic Capacitor	47UF±20%,16V,Φ5×11mm,	TC5,TC11	2
85	3040-2107-0010	Electrolytic Capacitor	100uF±20%,16V,Φ5×11mm	TC2,TC6,C2,C4，TC3	5
86	3040-2337-0017	Electrolytic Capacitor	330uF±20%,10V,Φ6.3×11mm	TC4	1
87	3040-2227-0038	Electrolytic Capacitor	220uF+80-20%,10V, 105°	C67,C69	2
88	3040-2108-0025	Electrolytic Capacitor	1000UF±20%,16V, SHL 型	PC14,PC15	2
89	3040-2106-0021	Electrolytic Capacitor	10uF±20%,400V,105°	PC25	1
90	3040-3222-0001	High Voltage Capacitor	2200PF±20%,1KV	PC20	1
91	3040-1222-0007	H-V Ceramic Capacitor	2200PF±20% AC400V	PC23	1
92	3170-3006-0307	SMD Bead	0603,120Ω,100MHz	FB2,FB6,FB7	3
93	3170-3006-0323	SMD Bead	0603,330Ω,100mHz,RoHS	FB10	1
94	3170-3008-0511	SMD Bead	0805,120Ω,100MHz	FB1,FB4,FB5	3
95	3170-3008-0507	SMD Bead	0805,60Ω,100MHz,RoHS	L34	1
96	3080-3217-5100	Convertor	BW21S7511A01TF	T2	1
97	3050-1312-1001	SMD Inductor	120nH±5%,0402,RoHS	L30,L31	2
98	3050-1327-1007	Whte High Frequency Ceramic	270nH±5%,0603	L1	1
99	3050-3047-0002	SMD Power Inductor	SD54-4R7MC 1.5A	L27,L29,L35	3
100	3050-1100-0002	Radial Inductor	10uH±10%, 2A	L5	1
101	3060-1990-0000	SMD Diode	BAV99,SOT-23	TD2	1
102	3060-1104-0000	Diode	FR104 DO-41	PD14	1
103	3060-1107-0000	Diode	FR107 DO-41	PD15	1
104	3060-1140-0700	Diode	IN4007 DO-41	PD10,PD11,PD12,PD13	4
105	3060-1158-2200	Diode	1N5822,DO-27,RoHS	PD18	1
106	3060-6034-0100	SMD FET	AO3401,SOT-23	Q21	1
107	3060-5855-0001	SMD Audion	S8550,SOT23	Q26	1
108	3060-5239-0400	SMD Audion	2N3904 SOT23	Q20,Q28,Q24	3
109	3060-3392-0000	LED	Φ3SRGW9-GY2,	LED1	1
110			Φ3,,ROHS		
111	3060-5239-0600	SMD Audion	2N3906 SOT23	Q27	1
112	3070-1243-8000	Receiver	HL-2438M,38KHz	U12	1
113	3070-1111-7003	SMD IC	AMS1117,1.2V,SOT-223	U5	1
114	3070-1817-0001	Photo Couple	BPC-817B DIP4	PIC3	1
115	3070-3431-0000	Voltage Regulation IC	TL431 TO-92	PIC4	1
116	3070-1884-7200	SMD IC	MN88472 LQFP64 65PIN ，ROHS	U9	1
117	3070-1603-0000	SMD IC	MxL603,QFN-25	U4	1
118	3150-1134-1181	Transformer	KB1341-17855,ROHS	PT2	1
119	3070-1240-8501	SMD IC	APS2408ES5-ADJ,SOT23-5L,ROHS	U8,U10,U15	3
120	3070-1381-2001	SMD IC	M3812-ALCA(with dolby）,LQFP-128-Pin	U1	1

Component List

c					
NO.	**Material No.**	**Name**	**Specification**	**Position**	**Qty**
122	3070-1253-2003	SMD IC	GD25Q32BSIG,SOP8,32M,208MIL,ROHS	U7	1
123	3070-1890-5000	SMD IC	SGM8905,MSOP-10	U6	1
124	3070-1532-1602	SMD IC	NT5TU32M16DG-BE.FBGA-8	U2	1
125	3070-1813-6100	IC	PN8136,DIP-7,ROHS	PIC6	1
126	3162-0104-2800	HDMI Socket	10428-01944	J1	1
127	3160-9383-1101	Concentric Socket	AV3-8.3-11,	JK2	1
129	3120-1102-0007	Fuse	Slow type,1A,250V	PF2	1
130	3160-5000-0000	USB Socket	ZX-USBSOCKET-A	J5	1
131	3110-2204-8600	Crystal	20.48MHz,49S,30PPM,	Y4	1
132	3110-2270-0600	Oscillator	27MHz,30PPM,49S	Y1	1
133	3110-2160-0610	Crystal	16MHz,49S,20PPM,CL=16PF	Y5	1
134	4303-1599-000H	Shield Cover	ST6.430.0024,0.3mm Tinplate, ROHS	J6	1
135	4303-0762-001H	Shield Top Cover	ST6.430.0016,0.3mm Tinplate	High Frequency	1
136	3200-3010-0000	Varnished Tube	Φ1.0		
137		Varnished Tube	Φ1.0×5.5mm×2	LED1	11
138					
139					
140					
141					
142					
143					
144					
145					
146					
147					
148					
149					
150					
151					
152					
153					
154					
155					
156					
157					
158					
159					
160					
161					
162					